PLK/PLKD

SERIES PLK MODULAR, ENCLOSED FINGER, PIN LOCATING CLAMPS
SERIES PLKD DISAPPEARING PIN LOCATING CLAMPS

Most versatile pin locating clamp in the industry

ISO 9001 REGISTERED
Quality Management System Certified

PLK05

PHD is a member of the MAC Distributor Network

phd®
SOLUTIONS FOR INDUSTRIAL AUTOMATION

www.phdinc.com

PLK

MODULAR PIN LOCATING CLAMPS

Major Benefits

- Completely enclosed fingers
- Available in pin diameters from 12.00 to 30.00 mm
- 5 or 10 mm clamping stroke
- Short, medium, and long pin top shapes
- Finger direction easily changed in the field
- Interchangeable pin sizes, styles, and heights
- Position sensing provides open and closed sensing with industry standard AC and DC weld field immune switch mounted in a protected housing
- Self-locking internal threads throughout eliminate need for thread locking adhesives or additional locking components

PIN STYLES

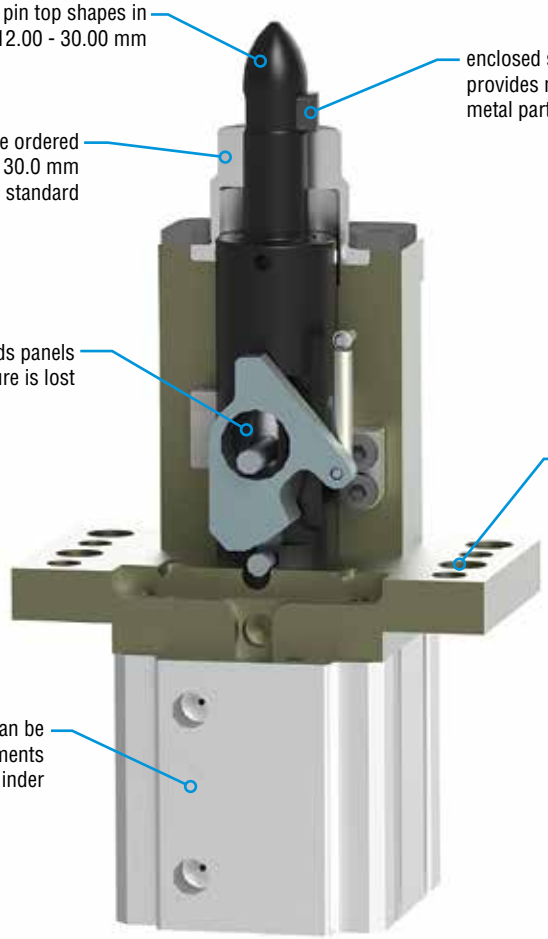

 © Copyright 2018, by PHD, Inc. All Rights Reserved. Printed in the U.S.A.

ORDERING DATA: SERIES PLK CLAMPS

CAD & Sizing Assistance

Use PHD's free online Product Sizing and CAD Configurator at www.phdinc.com/myphd

INDEX **PAGES**

Series PLK:
Major Benefits 2
Ordering Data 3
Engineering Data 4
Dimensions 5
Options ..... 6 - 13
Lock Setting 14
Procedures ..... 15 - 16
Exploded View & Parts List ..... 17 - 19

Series PLKD:
Major Benefits 20
Ordering Data 21
Engineering Data 22
Dimensions 22
Options ..... 23 - 31
Lock Adjustment Procedure 32
Clamp Actuation Steps 33
Exploded View & Parts List ..... 34 - 35
Unique PLKs & PLKDs 36

TO ORDER, SPECIFY:
Model, Unit Size and Stroke, Design No., Pin Size and Style and additional Options if desired.

NOTES:
1) To have the lock preset for sheet metal thickness, order MT and (the thickness).
   Lock may be preset at factory for material thickness in 0.1 mm [0.004 in] increments.
   MT11 would be for 1.1 mm material, MT20 would be for 2.0 mm material.
   Lock range is from 0 to 4.0 mm [0 to 0.157 in].
   Unless otherwise specified, factory lock default setting is MT20.
2) Magnet will be installed if cylinder switches are ordered.
3) Metric units have metric ports, imperial units have imperial ports.
4) Dual fingers are available in 15-30 mm pin diameters only.

UNIT SIZE / CLAMP STROKE
505 - 50 mm Bore, 5 mm Stroke
510 - 50 mm Bore, 10 mm Stroke

FINGER(S) DIRECTION
FD4S - Position 4 single finger (standard)
FD1S - Position 1 single finger
FD2S - Position 2 single finger
FD3S - Position 3 single finger
FD1D - Position 1/3 dual finger (see Note 4)
FD2D - Position 2/4 dual finger (see Note 4)

PORT FITTINGS (BOTH PORTS)
Blank - No fittings
LAA - 90° Swivel elbow, Metal
LBB - 90° Swivel elbow, Plastic

CYLINDER SWITCH OPTION
Blank - No Magnet (see Note 2)
SW00 - Magnet for switches installed
SW41 - 1 NPN Switch installed
SW42 - 2 NPN Switches installed
SW51 - 1 PNP Switch installed
SW52 - 2 PNP Switches installed

MODEL

DESIGN NO.
2 - Imperial
6 - Metric
See Note 3

PIN STYLE
B - Short length pin
C - Medium length pin
N - Long length pin

PORT POSITION
PP1 - Position 1 (standard)
PP2 - Position 2
PP3 - Position 3
PP4 - Position 4

MISCELLANEOUS OPTIONS
(specify all that apply)
Blank - None
R01 - Sensor Flag
R02 - Double Rod

PLK 510 - 2 - 1872 C 1 - E000 - FD4S - PP1 - LAA - PS1D1 - R01 - SW00 - B01 - MT20

PIN DIAMETER
Pin diameters available from 12.00 to 30.00 in 0.01 increments.
Examples: For 18.72 mm nominal pin, specify 1872
For 25.50 mm nominal pin, specify 2550
+0.00 / -0.02 mm Pin Tolerance

PART SUPPORT EXTENSION
E000 - Standard extension
Part support extension is available up to 30 mm taller than standard in 0.5 mm increments
Example: For 30.0 mm extension, specify E300
For 25.5 mm extension, specify E255

POSITION SENSOR OPTIONS
Blank - No sensor
Px1xx - Position sensor (see Position Sensor Option Code)

ADJUSTABLE LOCK SETTING
See Note 1

OPTIONAL MOUNTING PATTERNS
Blank - Standard flange body
B01 - 45 x 30 pattern 4X M10 threads + 2X 8 mm dowel
B02 - 30 x 60 pattern 4X M10 threads + 2X 8 mm dowel
B03 - 40 x 40 pattern 4X M10 threads + 2X 8 mm dowel
B04 - 40 x 40 pattern 2X M10 threads + 2X 8 mm dowel
B05 - 30 x 30 pattern 2X M10 threads + 2X 10 mm dowel
B06 - 45 x 30 pattern 2X M12 threads + 2X 10 mm dowel

POSITION SENSOR OPTION CODE

P S 1 D 1

HOUSING OPTION
P - Positional Sensing

SENSING POSITION
S - Standard
R - Reversed

SWITCH HOUSING POSITION
1 - Position 1

SWITCH OPTION
N - No Switch
A - 5-Pin AC/DC Switch (Turck)
D - 4-Pin DC Switch (P + F)
E - 4-Pin DC Switch (Turck)
F - 4-Pin DC Switch (Efector)
H - 4-Pin DC Switch (P + F)
J - 4-Pin DC Switch (Turck)

CONNECTOR POSITION
1 - Parallel to Main Pin
9 - Perpendicular to Main Pin*

***NOTE:**
Connector position 9 is not available with switch option A.

SPECIFICATIONS	SERIES PLK
SEALS	Polyurethane
OPERATING TEMPERATURE	-20° to +180°F [-28° to +82°C]
LUBRICATION	Factory lubricated for life

MODEL	UNIT WEIGHT		CLAMP FORCE 87 psi [6 bar]		CLAMP FORCE FACTOR Cf		CLOSE OR OPEN TIME 87 psi [6 bar]	DISPLACEMENT			
								CLOSE		OPEN	
	lb	kg	lb	N	Imperial	Metric	sec	in^3	cm^3	in^3	cm^3
PLK5XX-X-1250C1-E000-FD4S-PP1	4.2	1.91	223	991	2.56	165	0.5	2.47	40.5	2.95	48.3
PLK5XX-X-1250N1-E300-FD4S-PP1	4.5	2.05									
PLK5XX-X-1550C1-E000-FD4S-PP1	4.2	1.92									
PLK5XX-X-1550N1-E300-FD4S-PP1	4.6	2.09									
PLK5XX-X-1850C1-E000-FD4S-PP1	4.3	1.96									
PLK5XX-X-1850N1-E300-FD4S-PP1	4.8	2.18									
PLK5XX-X-2550C1-E000-FD4S-PP1	4.8	2.18									
PLK5XX-X-2550N1-E300-FD4S-PP1	5.5	2.51									
PLK5XX-X-2950C1-E000-FD4S-PP1	4.9	2.21									
PLK5XX-X-2950N1-E300-FD4S-PP1	5.7	2.58									

NOTE: All Series PLK model descriptions are based on the "C" or "N" style pin shape. All "B" style pin shapes will weigh the same or slightly less than the "C" style based on the same model description.

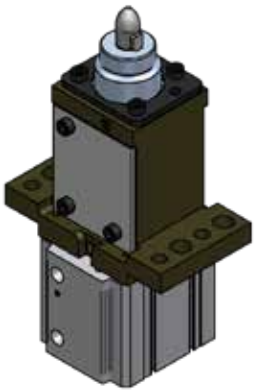

PLK510-2-1250C1-E000-FD4S-PP1

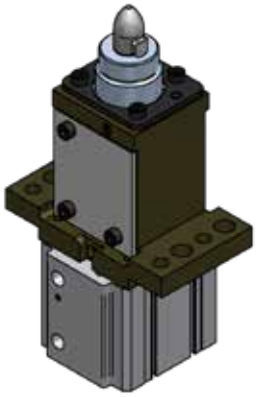

PLK510-2-1550C1-E000-FD4S-PP1

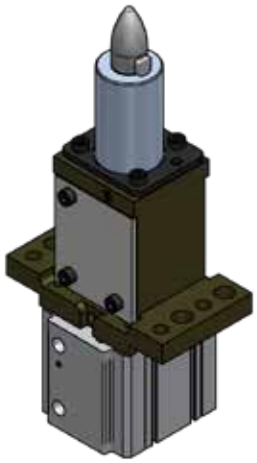

PLK510-2-1850N1-E300-FD4S-PP1

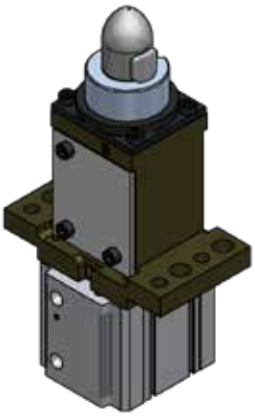

PLK510-2-2550C1-E000-FD4S-PP1

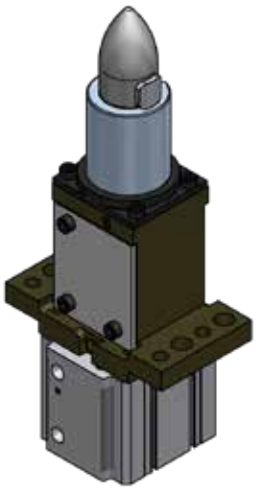

PLK510-2-2950N1-E300-FD4S-PP1

DIMENSIONS: SERIES PLK CLAMPS

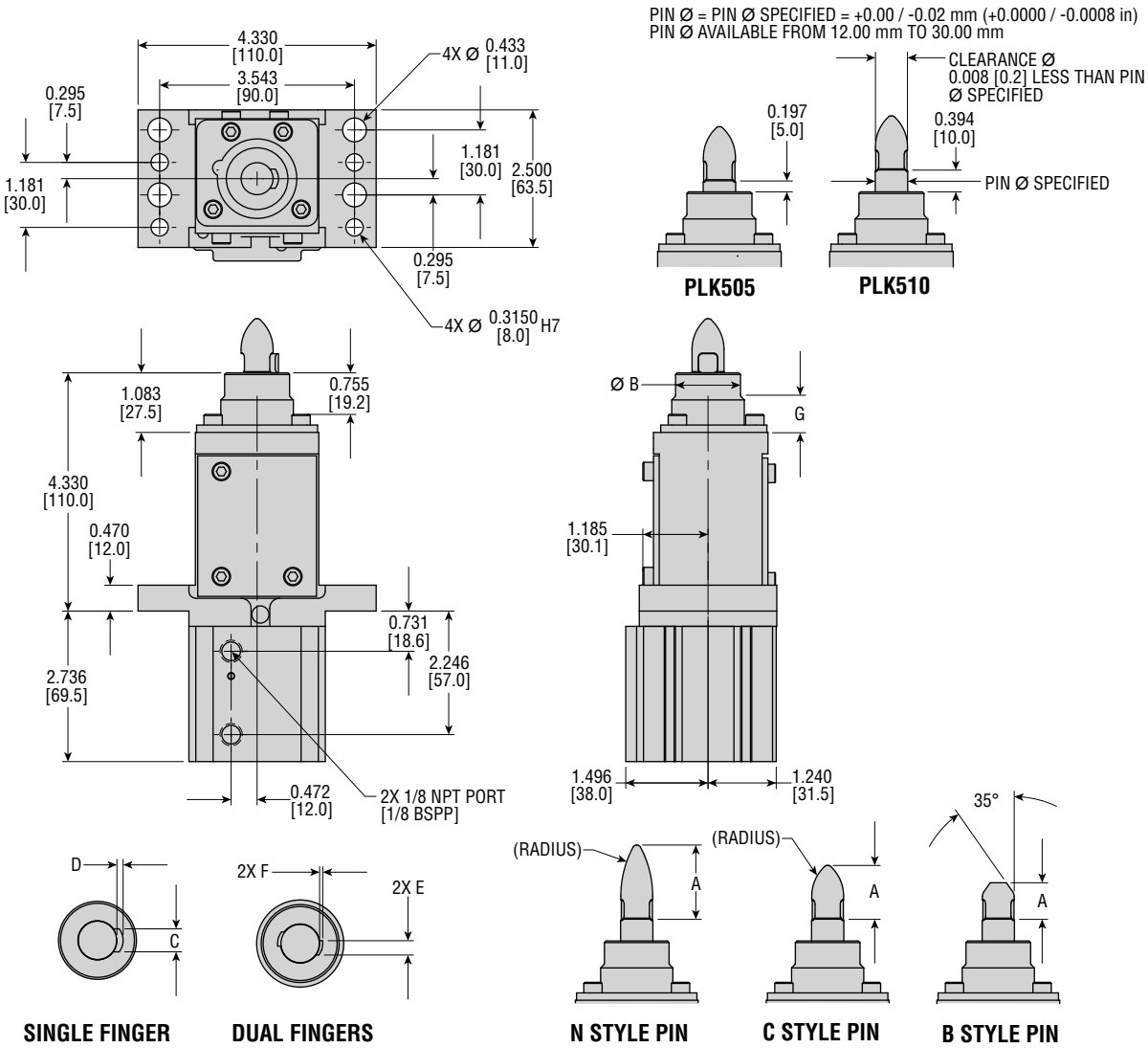

DIMENSION	MODEL NUMBER									
	PLK5xx-x-1200 thru PLK5xx-x-1249		PLK5xx-x-1250 thru PLK5xx-x-1269		PLK5xx-x-1270 thru PLK5xx-x-1499		PLK5xx-x-1500 thru PLK5xx-x-1699		PLK5xx-x-1700 thru PLK5xx-x-1799	
	in	mm	in	mm	in	mm	in	mm	in	mm
A - N STYLE	1.143	29.0	1.143	29.0	1.143	29.0	1.358	34.5	1.358	34.5
A - C STYLE	0.867	22.0	0.867	22.0	0.867	22.0	0.985	25.0	0.985	25.0
A - B STYLE	0.590	15.0	0.590	15.0	0.590	15.0	0.669	17.0	0.669	17.0
B	1.104	28.0	1.104	28.0	1.104	28.0	1.181	30.0	1.181	30.0
C	0.263	6.7	0.263	6.7	0.263	6.7	0.348	8.8	0.348	8.8
D	0.056	1.4	0.056	1.4	0.068	1.7	0.095	2.4	0.108	2.7
E	—	—	—	—	—	—	0.217	5.5	0.217	5.5
F	—	—	—	—	—	—	0.041	1.0	0.064	1.6
G (E000)	0.714	18.1	0.714	18.1	0.714	18.1	0.714	18.1	0.714	18.1

DIMENSION	MODEL NUMBER							
	PLK5xx-x-1800 thru PLK5xx-x-1999		PLK5xx-x-2000 thru PLK5xx-x-2199		PLK5xx-x-2200 thru PLK5xx-x-2499		PLK5xx-x-2500 thru PLK5xx-x-3000	
	in	mm	in	mm	in	mm	in	mm
A - N STYLE	1.379	35.0	1.379	35.0	1.733	44.0	2.028	51.5
A - C STYLE	1.083	27.5	1.083	27.5	1.221	31.0	1.427	36.2
A - B STYLE	0.669	17.0	0.669	17.0	0.728	18.5	0.886	22.5
B	1.338	34.0	1.338	34.0	1.417	36.0	1.654	42.0
C	0.348	8.8	0.348	8.8	0.474	12.0	0.599	15.2
D	0.108	2.75	0.108	2.75	0.108	2.75	0.108	2.75
E	0.217	5.5	0.217	5.5	0.312	7.9	0.376	9.6
F	0.074	1.9	0.094	2.4	0.104	2.6	0.108	2.7
G (E000)	—	—	—	—	—	—	—	—

All dimensions are reference only unless specifically toleranced.

Exxx PART SUPPORT EXTENSION

The Exxx option allows for an optional part support extension. The Exxx can be ordered in 0.5 mm increments from 0.5 to 30.0 mm taller. The Exxx option is available with all bodies or pin styles.

E000 is standard 27.5 mm.
E005 is 0.5 mm taller than standard or 28.00 mm.
E150 is 15.0 mm taller than standard or 42.50 mm.
E300 is 30.0 mm taller than standard or 57.50 mm.
For part support extensions greater than 30.0 mm (E300), consult PHD.

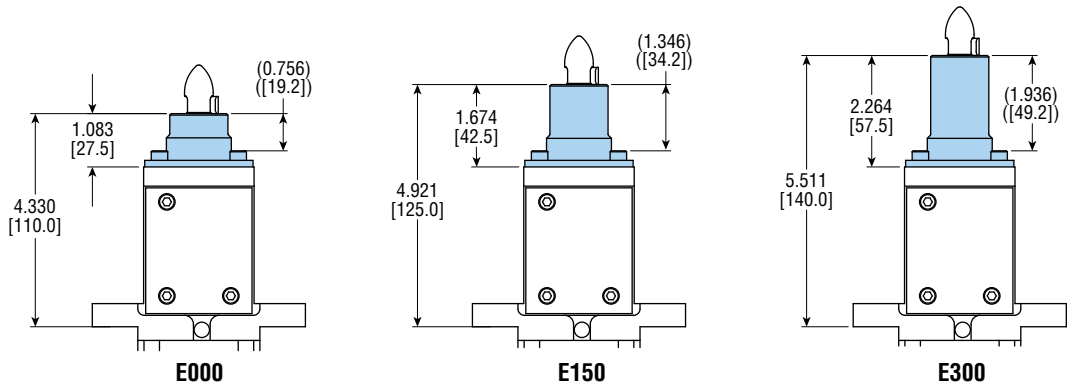

FDxx FINGER DIRECTION

The FDxx option provides alternate finger directions for flexibility and customer convenience.

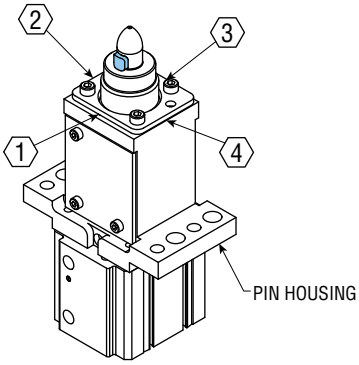

NOTE:
NUMBER IN HEX INDICATES POSITION IN RELATION TO PIN HOUSING

SINGLE FINGERS:

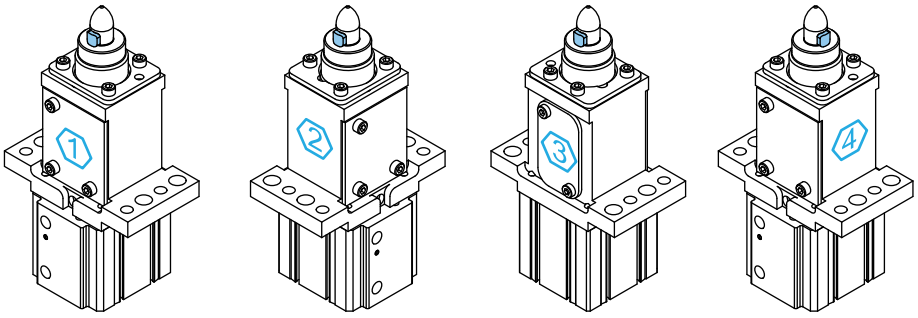

FD1S FD2S FD3S FD4S

DUAL FINGERS:

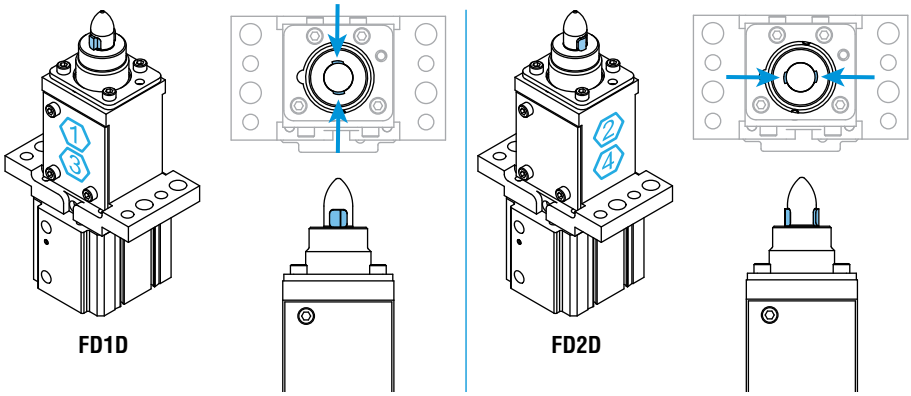

FD1D FD2D

All dimensions are reference only unless specifically toleranced.

PPx PORT LOCATION

The PPx option provides alternate port locations for the cylinder providing flexibility and customer convenience. The cylinder can be rotated in the field by removing the cylinder mounting screws and rotating to the desired location in 90° increments.

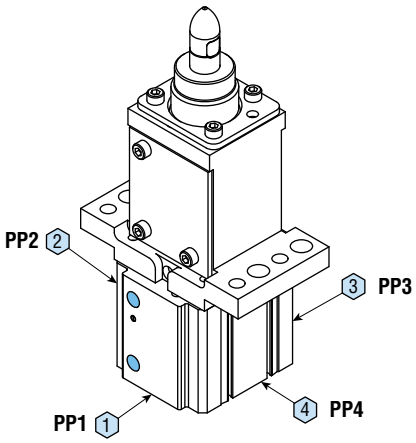

NOTE: NUMBER IN HEX INDICATES PORT POSITION IN RELATION TO PIN HOUSING

Lxx PORT FITTINGS

The LAA (metal) or LBB (plastic) accessory provides 90° swivel fittings for ease of air line hook up.

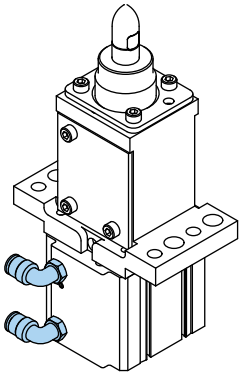

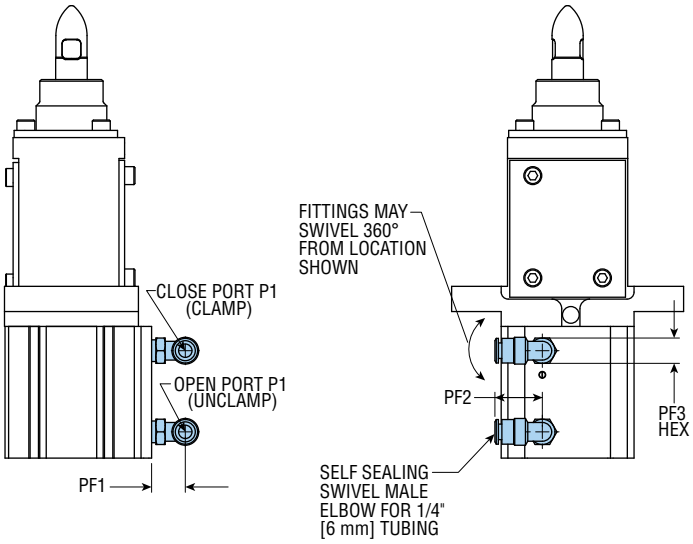

LETTER DIM	MODEL NUMBER PLK5xx	
	in	mm
P1	1/8 NPT	1/8 BSPP
PF1	0.629	16.0
PF2	0.885	22.5
PF3	0.472	12.0

OPTION CODE	PART NUMBER	
	IMPERIAL	METRIC
LAA	62178-003	62195-005
LBB	71120-001	71121-001

All dimensions are reference only unless specifically toleranced.

PS1xx STANDARD POSITION SENSING

PR1xx REVERSED POSITION SENSING

This option provides clamp and unclamp sensing by affixing an aluminum housing to the side of the clamp body. The unclamp switch is fixed needing no adjustment. The clamp switch is adjustable throughout the entire clamp stroke. Loosening the M5 screw and sliding it up or down adjusts the clamp switch position. PS positions the S02 switch to sense unclamped and the S01 switch to sense clamped. PR positions the S01 switch to sense unclamped and the S02 switch to sense clamped. See diagrams for satellite switch to quick disconnect pin number relationships on page 10.

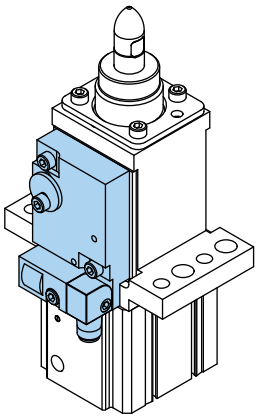

POSITION SENSOR OPTION CODE

P S 1 D 1

HOUSING OPTION	SENSING POSITION	SWITCH HOUSING POSITION	SWITCH OPTION	CONNECTOR POSITION
P - Positional Sensing	S - Standard R - Reversed	1 - Position 1	N - No Switch A - 5-Pin AC/DC Switch (Turck) D - 4-Pin DC Switch (P + F) E - 4-Pin DC Switch (Turck) F - 4-Pin DC Switch (Efector) H - 4-Pin DC Switch (P + F) J - 4-Pin DC Switch (Turck)	1 - Parallel to Main Pin 9 - Perpendicular to Main Pin*

***NOTE:**
Connector position 9 is not available with switch option A.

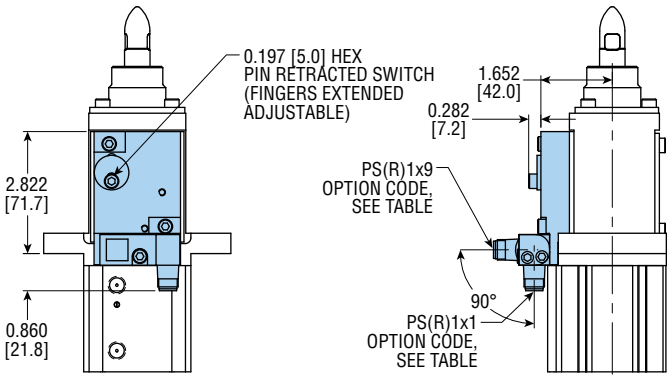

FLANGE STYLE BODY

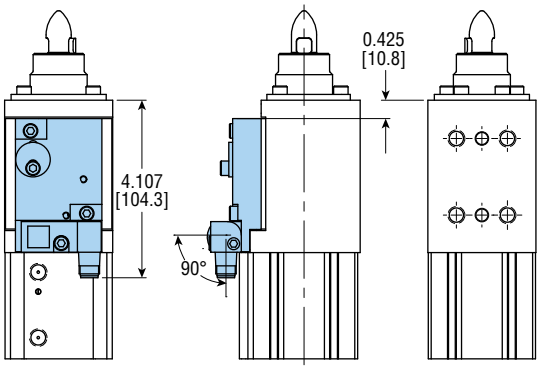

THREADED BODY STYLE

OPTION CODE	CABLE CONNECTION
PS(R)1A1	1/2-20 UNF
PS(R)1D1(9)	M12 x 1
PS(R)1E1(9)	M12 x 1
PS(R)1F1(9)	M12 x 1
PS(R)1H1(9)	M12 x 1
PS(R)1J1(9)	M12 x 1

All dimensions are reference only unless specifically toleranced.

SWITCH NUMBERS IF ORDERED SEPARATELY

PLK HOUSING BODY STYLE	SWITCH HOUSING KIT NUMBER	SWITCH NUMBER	SWITCH OPTION	DESCRIPTION
FLANGE STYLE HOUSING PS1xx SWITCH	79092-00	No Switch	N	Switch; No Switch
	79092-01	71483-001-PLK	D	Switch; 4 Pin DC, PNP, P & F
	79092-02	71483-002-PLK	A	Switch; 5 Pin AC/DC, Turck
	79092-03	71483-003-PLK	E	Switch; 4 Pin DC, PNP, Turck
	79092-04	71483-004-PLK	F	Switch; 4 Pin DC, PNP, Efector
	79092-05	71483-005-PLK	H	Switch; 4 Pin DC, NPN, P & F
	79092-06	71483-006-PLK	J	Switch; 4 Pin DC, NPN, Turck
FLANGE STYLE HOUSING PR1xx SWITCH	79093-00	No Switch	N	Switch; No Switch
	79093-01	71483-001-PLK	D	Switch; 4 Pin DC, PNP, P & F
	79093-02	71483-002-PLK	A	Switch; 5 Pin AC/DC, Turck
	79093-03	71483-003-PLK	E	Switch; 4 Pin DC, PNP, Turck
	79093-04	71483-004-PLK	F	Switch; 4 Pin DC, PNP, Efector
	79093-05	71483-005-PLK	H	Switch; 4 Pin DC, NPN, P & F
	79093-06	71483-006-PLK	J	Switch; 4 Pin DC, NPN, Turck
THREADED BXX STYLE HOUSING PS1xx SWITCH	79094-00	No Switch	N	Switch; No Switch
	79094-01	71483-001-PLK	D	Switch; 4 Pin DC, PNP, P & F
	79094-02	71483-002-PLK	A	Switch; 5 Pin AC/DC, Turck
	79094-03	71483-003-PLK	E	Switch; 4 Pin DC, PNP, Turck
	79094-04	71483-004-PLK	F	Switch; 4 Pin DC, PNP, Efector
	79094-05	71483-005-PLK	H	Switch; 4 Pin DC, NPN, P & F
	79094-06	71483-006-PLK	J	Switch; 4 Pin DC, NPN, Turck
THREADED BXX STYLE HOUSING PR1xx SWITCH	79095-00	No Switch	N	Switch; No Switch
	79095-01	71483-001-PLK	D	Switch; 4 Pin DC, PNP, P & F
	79095-02	71483-002-PLK	A	Switch; 5 Pin AC/DC, Turck
	79095-03	71483-003-PLK	E	Switch; 4 Pin DC, PNP, Turck
	79095-04	71483-004-PLK	F	Switch; 4 Pin DC, PNP, Efector
	79095-05	71483-005-PLK	H	Switch; 4 Pin DC, NPN, P & F
	79095-06	71483-006-PLK	J	Switch; 4 Pin DC, NPN, Turck

Kit includes: Switch housing, plate, switch specified with parts pre-assembled. Mounting fasteners included.

MATCHING CORDSETS 2 METERS LONG

SWITCH OPTION	PHD PART NUMBER	CORDSET PART NUMBER
A	73317-00-02	KB 5T-2
D	65440-001-02	V1-G-YE2M-PVC
E	78039-00-02	RK 4.4T-2
F	65440-001-02	V1-G-YE2M-PVC
H	65440-001-02	V1-G-YE2M-PVC
J	78039-00-02	RK 4.4T-2

SWITCH OPTION A 71483-002-PLK Turck Part #: Ni 2-Q6.5-ADZ32-0.16-FSB 5.4X4/S304

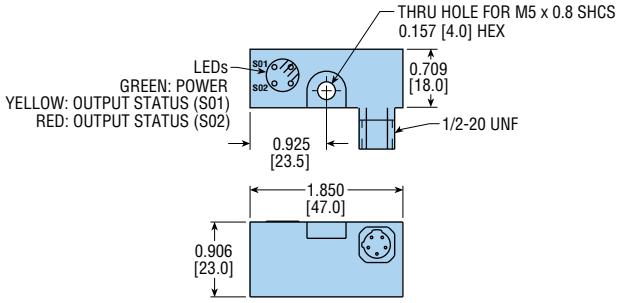

OPTION CODE	SATELLITE		QUICK DISCONNECT PIN NUMBER
	UNCLAMPED	CLAMPED	
PS1A1	S02	S01	S01 = Pin 5
PR1A1	S01	S02	S02 = Pin 4

4-WIRE AC/DC

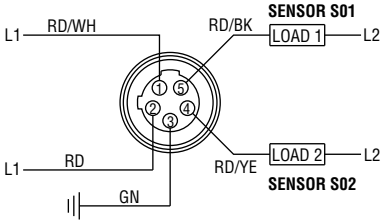

SWITCH OPTION D 71483-001-PLK P + F Part #: NBN2-F581-160S6-E8-V1 (PNP)
SWITCH OPTION H 71483-005-PLK P + F Part #: NBN2-F581-160S6-E10-V1 (NPN)

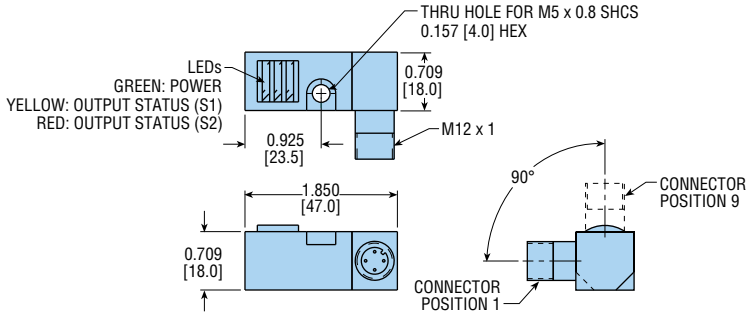

OPTION CODE	SATELLITE		QUICK DISCONNECT PIN NUMBER
	UNCLAMPED	CLAMPED	
PS1Dx or PS1Hx	S2	S1	S1 = Pin 4
PR1Dx or PR1Hx	S1	S2	S2 = Pin 2

4-WIRE DC (V1 TYPE)
NPN DUAL NORMALLY OPEN

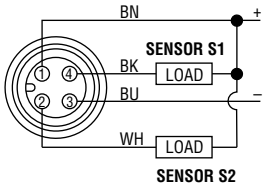

4-WIRE DC (V1 TYPE)
PNP DUAL NORMALLY OPEN

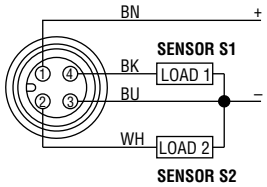

SWITCH OPTION E 71483-003-PLK Turck Part #: Ni 2-Q6.5-0.16-BDS-2AP6X3-H1141/S34 (PNP)
SWITCH OPTION J 71483-006-PLK Turck Part #: Ni 2-Q6.5-AN6-0.16-FS 4.4X3/S304 (NPN)

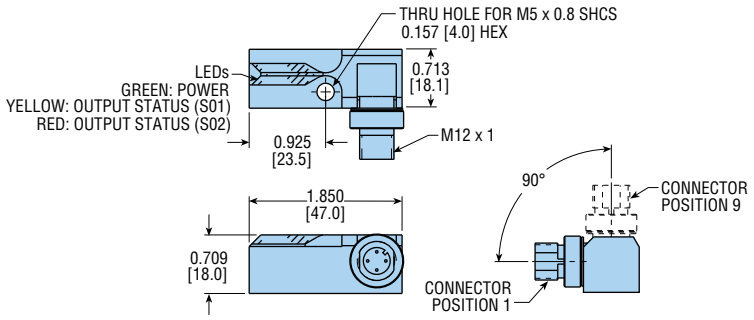

OPTION CODE	SATELLITE		QUICK DISCONNECT PIN NUMBER
	UNCLAMPED	CLAMPED	
PS1Ex or PS1Jx	S02	S01	S01 = Pin 4
PR1Ex or PR1Jx	S01	S02	S02 = Pin 2

4-WIRE DC
NPN DUAL NORMALLY OPEN

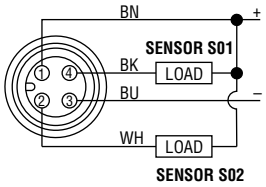

4-WIRE DC
PNP DUAL NORMALLY OPEN

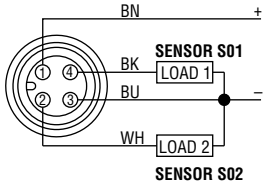

SWITCH OPTION F 71483-004-PLK Efector Part #: IN 5375 (PNP)

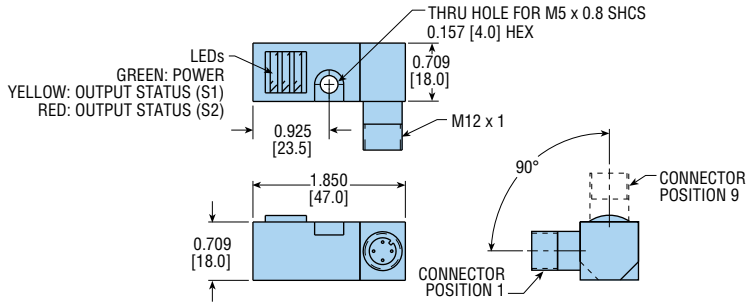

OPTION CODE	SATELLITE		QUICK DISCONNECT PIN NUMBER
	UNCLAMPED	CLAMPED	
PS1Fx	S2	S1	S1 = Pin 4
PR1Fx	S1	S2	S2 = Pin 2

4-WIRE DC
PNP DUAL NORMALLY OPEN

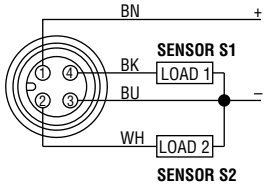

All dimensions are reference only unless specifically toleranced.

R01 SENSOR FLAG

Provides an external flag on a piston rod that extends out of the bottom of the clamp. The position of the flag indicates if the pin is extended or retracted. Flag travel varies with the panel thickness. 1 mm min. to 10 mm max. The white composite flag can be seen by optical sensing systems. Manually pushing the flag toward the clamp body will overcome the internal locking feature.

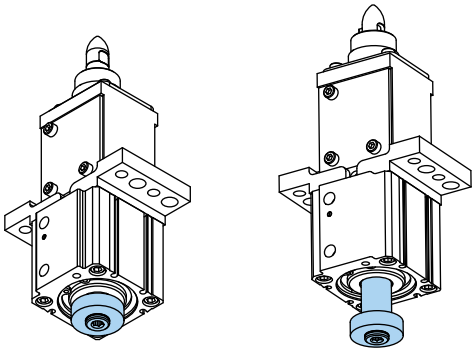

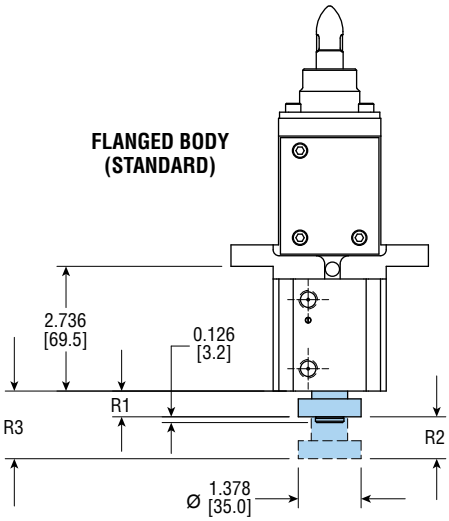

LETTER DIM	MODEL NUMBER			
	PLK505		PLK510	
	in	mm	in	mm
R1	0.762	19.4	0.565	14.4
R2	0.661	16.8	0.858	21.8
R3	1.423	36.1	1.423	36.1

R02 DOUBLE ROD

Provides manual unlocking ability from below the clamp. Manually pushing the external rod that extends out the bottom will overcome the internal lock.

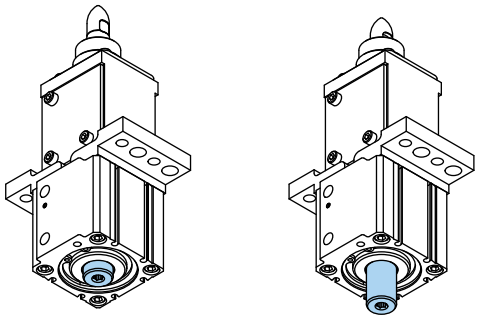

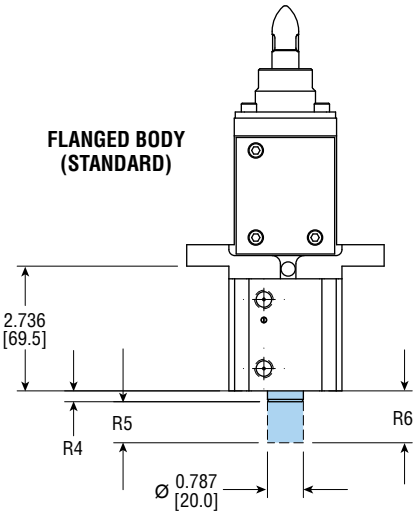

LETTER DIM	MODEL NUMBER			
	PLK505		PLK510	
	in	mm	in	mm
R4	0.435	11.0	0.238	6.0
R5	0.661	16.8	0.858	21.8
R6	1.096	27.8	1.096	27.8

All dimensions are reference only unless specifically toleranced.

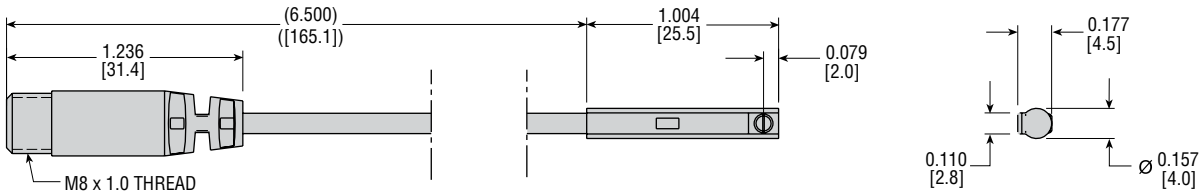

SW41 1 NPN SWITCH INSTALLED

SW42 2 NPN SWITCHES INSTALLED

PART NO.	DESCRIPTION
73360-01	Solid State NPN (Sink) 5 - 28V DC, 165 mm Cable with Quick Disconnect

SPECIFICATIONS	73360-01
SWITCHING LOGIC	Solid State Output, Normally Open
SENSOR TYPE	NPN Current Sinking
OPERATING VOLTAGE	5 - 28 VDC
SWITCHING CURRENT	200 mA max
SWITCHING RATING	6 W max
CURRENT CONSUMPTION	20 mA @ 24V max (Switch Active)
VOLTAGE DROP	0.5V @ 200 mA max
LEAKAGE CURRENT	0.01 mA max
INDICATOR	Red LED
CABLE	Ø 2.8, 3C, PVC
SENSITIVITY	40 Gauss
TEMPERATURE RANGE	-10° to 70°C
SHOCK	50G
VIBRATION	9G
ENCLOSURE CLASSIFICATION	IP67 (NEMA 6)
PROTECTION CIRCUIT	Power Source Reverse Polarity, Surge Suppression

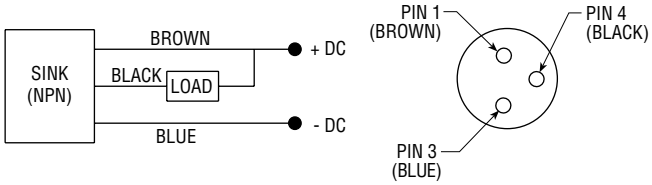

SW51 1 PNP SWITCH INSTALLED

SW52 2 PNP SWITCHES INSTALLED

PART NO.	DESCRIPTION
73360-02	Solid State PNP (Source) 5 - 28V DC, 165 mm Cable with Quick Disconnect

SPECIFICATIONS	73360-02
SWITCHING LOGIC	Solid State Output, Normally Open
SENSOR TYPE	PNP Current Sourcing
OPERATING VOLTAGE	5 - 28 VDC
SWITCHING CURRENT	200 mA max
SWITCHING RATING	6 W max
CURRENT CONSUMPTION	20 mA @ 24V max (Switch Active)
VOLTAGE DROP	0.5V @ 200 mA max
LEAKAGE CURRENT	0.01 mA max
INDICATOR	Green LED
CABLE	Ø 2.8, 3C, PVC
SENSITIVITY	40 Gauss
TEMPERATURE RANGE	-10° to 70°C
SHOCK	50G
VIBRATION	9G
ENCLOSURE CLASSIFICATION	IP67 (NEMA 6)
PROTECTION CIRCUIT	Power Source Reverse Polarity, Surge Suppression

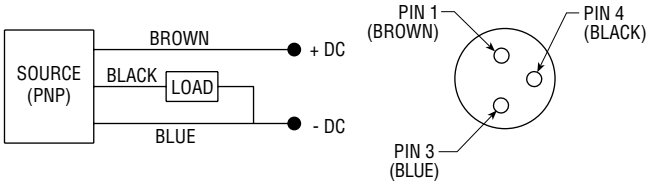

SWITCH SLOT LOCATIONS

When switches are ordered on a unit, they will be installed on side 2.

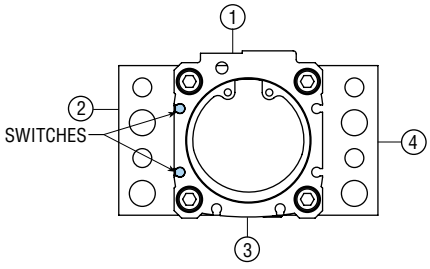

PLK5xx

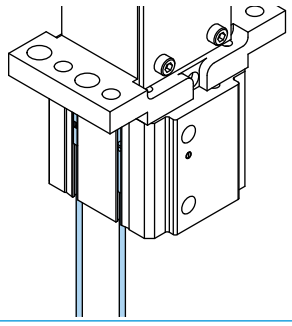

63549-xx CORDSET WITH FEMALE QUICK CONNECT

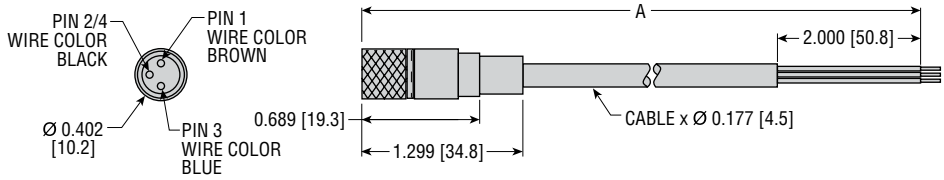

MODEL NO.	LETTER DIM. A
63549-02	78.74 [2 m]
63549-05	196.85 [5 m]

All dimensions are reference only unless specifically toleranced.

Bxx BODY MOUNTING OPTIONS

This option provides for six standard body mounting patterns to suit mounting requirements.

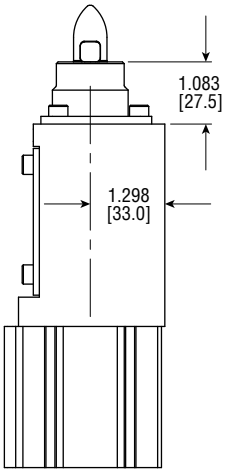

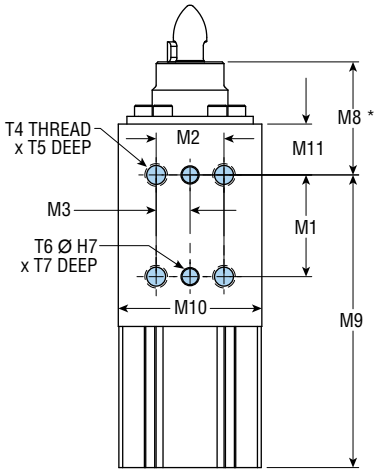

B01 & B02

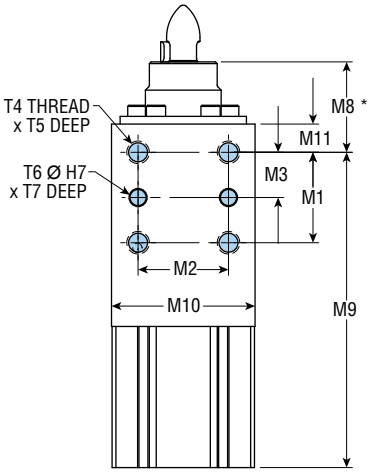

B03

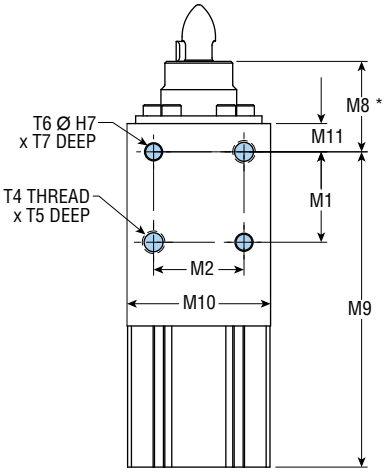

B04

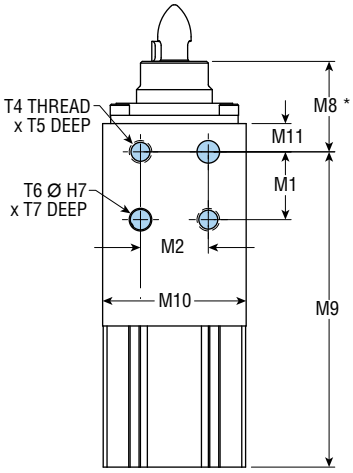

B05 & B06

DIMENSION	MODEL NUMBER											
	B01		B02		B03		B04		B05		B06	
	in	mm	in	mm	in	mm	in	mm	in	mm	in	mm
M1	1.772	45.0	2.362	60.0	1.575	40.0	1.575	40.0	1.181	30.0	1.772	45.0
M2	1.181	30.0	1.181	30.0	1.575	40.0	1.575	40.0	1.181	30.0	1.181	30.0
M3	0.591	15.0	0.591	15.0	0.787	20.0	—	—	—	—	—	—
T4	M10 x 1.5		M10 x 1.5		M10 x 1.5		M10 x 1.5		M10 x 1.5		M12 x 1.75	
T5	0.669	17.0	0.669	17.0	0.591	15.0	0.591	15.0	0.669	17.0	0.512	13.0
T6	0.315	8.0	0.315	8.0	0.315	8.0	0.315	8.0	0.394	10.0	0.394	10.0
T7	0.350	8.9	0.350	8.9	0.512	13.0	0.512	13.0	0.433	11.0	0.433	11.0
M8	1.969	50.0	1.772	45.0	1.575	40.0	1.575	40.0	1.575	40.0	1.575	40.0
M9	5.098	129.5	5.295	134.5	5.492	139.5	5.492	139.5	5.492	139.5	5.492	139.5
M10	2.500	63.5	2.500	63.5	2.500	63.5	2.500	63.5	2.500	63.5	2.500	63.5
M11	0.886	22.5	0.689	17.5	0.492	12.5	0.492	12.5	0.492	12.5	0.492	12.5

* **NOTE:** ALL M8 DIMENSIONS ARE FOR E000 PART SUPPORT STANDARD HEIGHT

All dimensions are reference only unless specifically toleranced.

MTxx MATERIAL THICKNESS ADJUSTMENT

Provides the clamp with the adjustable lock already set for the maximum material thickness for the application. Specify the thickest material.

Example: 1.6 mm material = MT16

Specify MT16 and the clamp will arrive preset to lock at that material thickness. The sequenced design prevents the finger from retracting until the pin is fully extended. The part can move the amount of clearance between the lock bracket and adjustment screw, but the extended finger keeps the part trapped securely on the pin.

Unless otherwise specified, the factory lock default setting is MT20 = 2.0 mm material.

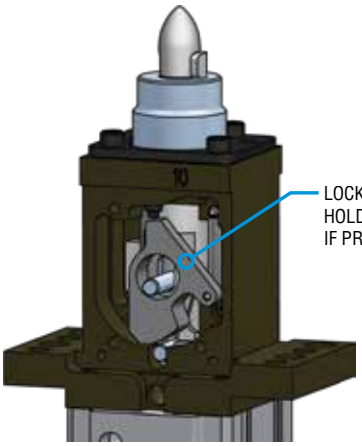

LOCK SETTING PROCEDURE

Adjustment procedures for PLK lock with material specified:

1) Start in the unclamped position, with the pin up, and the finger(s) retracted into the pin.
2) Install the part support (item 5) with the adjustment slot over the adjustment screw (item 8). Install the flange plate over the part support aligning the adjustment screw and two holes as shown. Hand tighten two times (item 7). (See Figures 1 and 2.)
3) Install the shims to match the panel thickness requested. Close the clamp on the shims with air pressure (87 psi [6 bar]).
4) Make sure the lock bracket (item 14) rotates counterclockwise into position under the adjustment screw (see Figure 3). Turn the adjustment screw clockwise until it contacts the top of the lock bracket (see Figure 4).
5) After touching, back the adjustment screw off one full turn to assure clearance so the lock bracket is free to rotate clockwise when the clamp opens (see Figure 5).
6) Unclamp the unit, remove the shim and two fasteners (item 7).
7) Rotate the flange plate (item 6) on the part support and align the four mounting holes as shown. (Figure 6)
8) Add the four screws (item 7) and tighten to 44 in-lbs [5 Nm].

-MT20 = 2 mm material thickness
-MT40 = 4.0 mm (max)
Lock may be preset in 0.1 mm increments

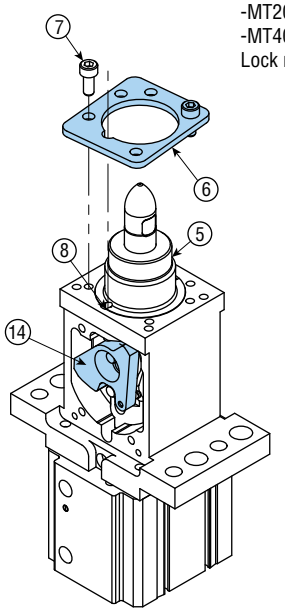

FIGURE 1

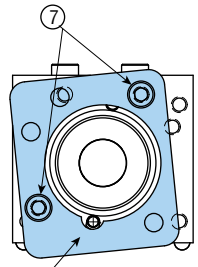

FIGURE 2

NOTE ADJUSTMENT SCREW ALIGNED WITH PART SUPPORT SLOT AND FLANGE SLOT

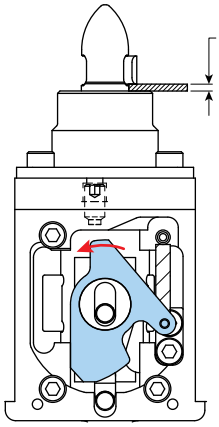

FIGURE 3

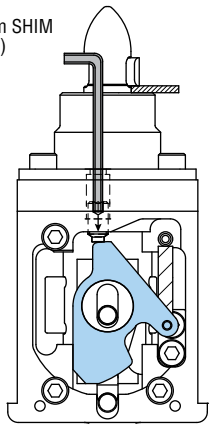

FIGURE 4

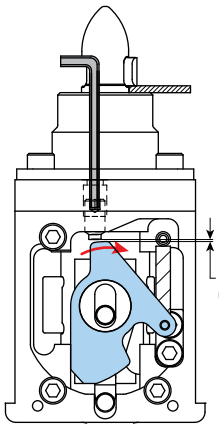

FIGURE 5

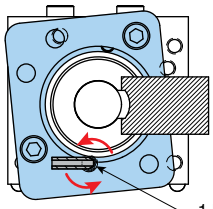

FIGURE 5
TOP VIEW

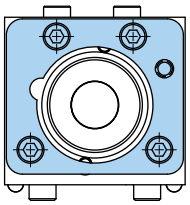

FIGURE 6

LOCKING MECHANISM & MANUAL OPENING

The Series PLK incorporates a locking mechanism that keeps the pin retracted and the finger extended so panels are trapped in position on the pin. The locking mechanism does not maintain clamp force when pressure is lost. During normal operation, air pressure moves the piston, releasing the lock, allowing the pin to extend, the finger to retract, and unclamp the part. To manually unlock the clamp, first remove air pressure, then loosen the screw and rotate the cover out of the way. Insert a small screwdriver under the dowel pin and lift it up. This will release the lock, extend the pin, and retract the finger. (See diagram.) The R01 or R02 option can also manually unlock the clamp. First, remove air pressure then push the rod into the cylinder, moving the piston. This will release the lock, extend the pin, and retract the finger. (See diagram.)

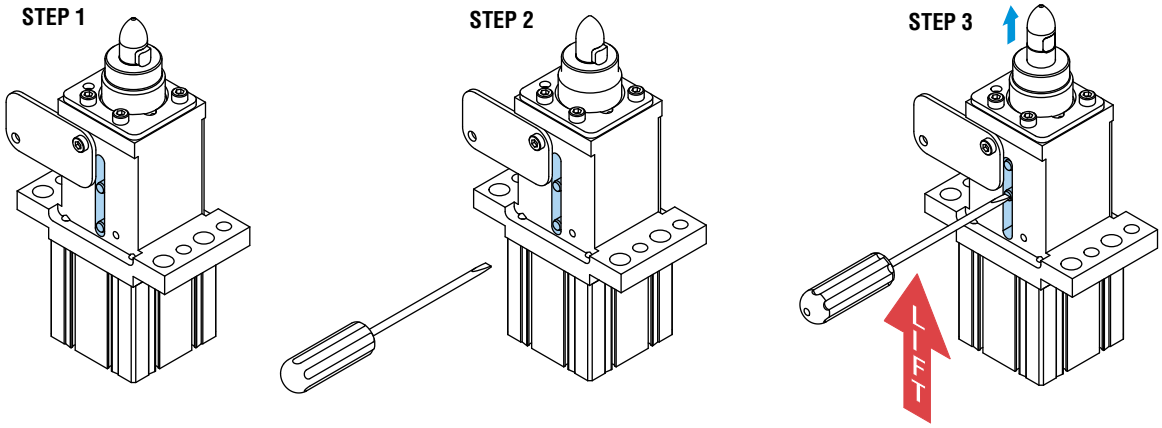

WITH R01 OR R02 OPTION:

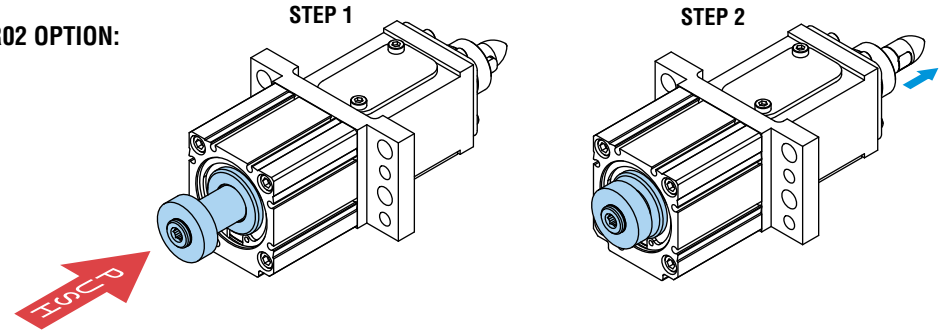

HOW TO CHANGE FINGER DIRECTION

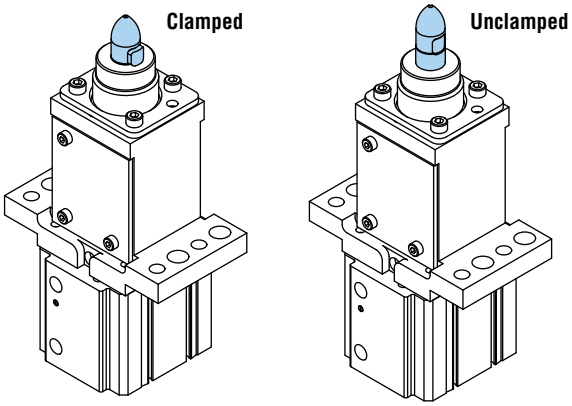

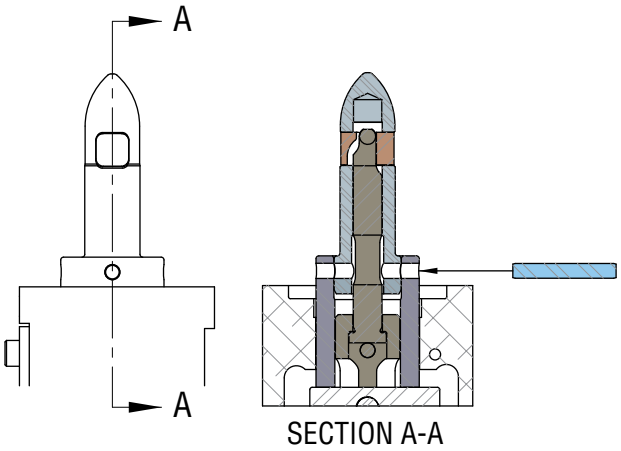

Dowel pin installs through hole in pin base, pin top, and slot in drive rod.

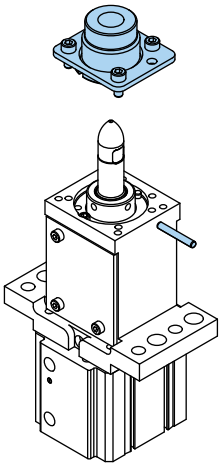

(Position 4 shown)

1) With the pin in the unclamped position, remove flange and part support. Carefully slide dowel pin out of pin assembly.

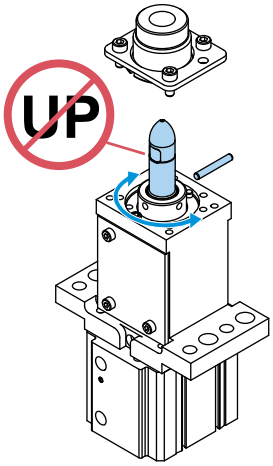

(Position 1 shown)

2) Carefully rotate pin top to desired position (90° increments). **Do not lift up on pin top.** Slide dowel pin back into pin. Dowel pin must be parallel to finger pocket.

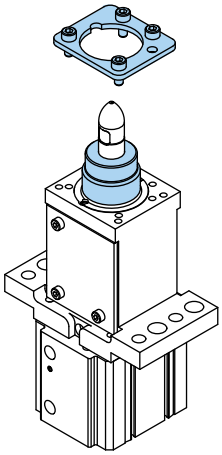

(Position 1 shown)

3) Assemble part support into counterbore in top of body. Align slot in support flange with dowel in body counterbore.

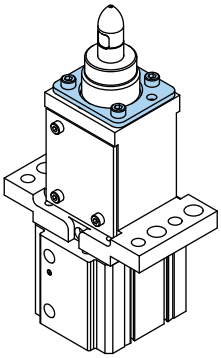

(Position 1 shown)

4) Install flange and tighten screws.

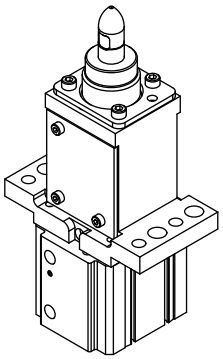

Position 1 is complete with finger direction change.

EXPLODED VIEW: SERIES PLK CLAMPS

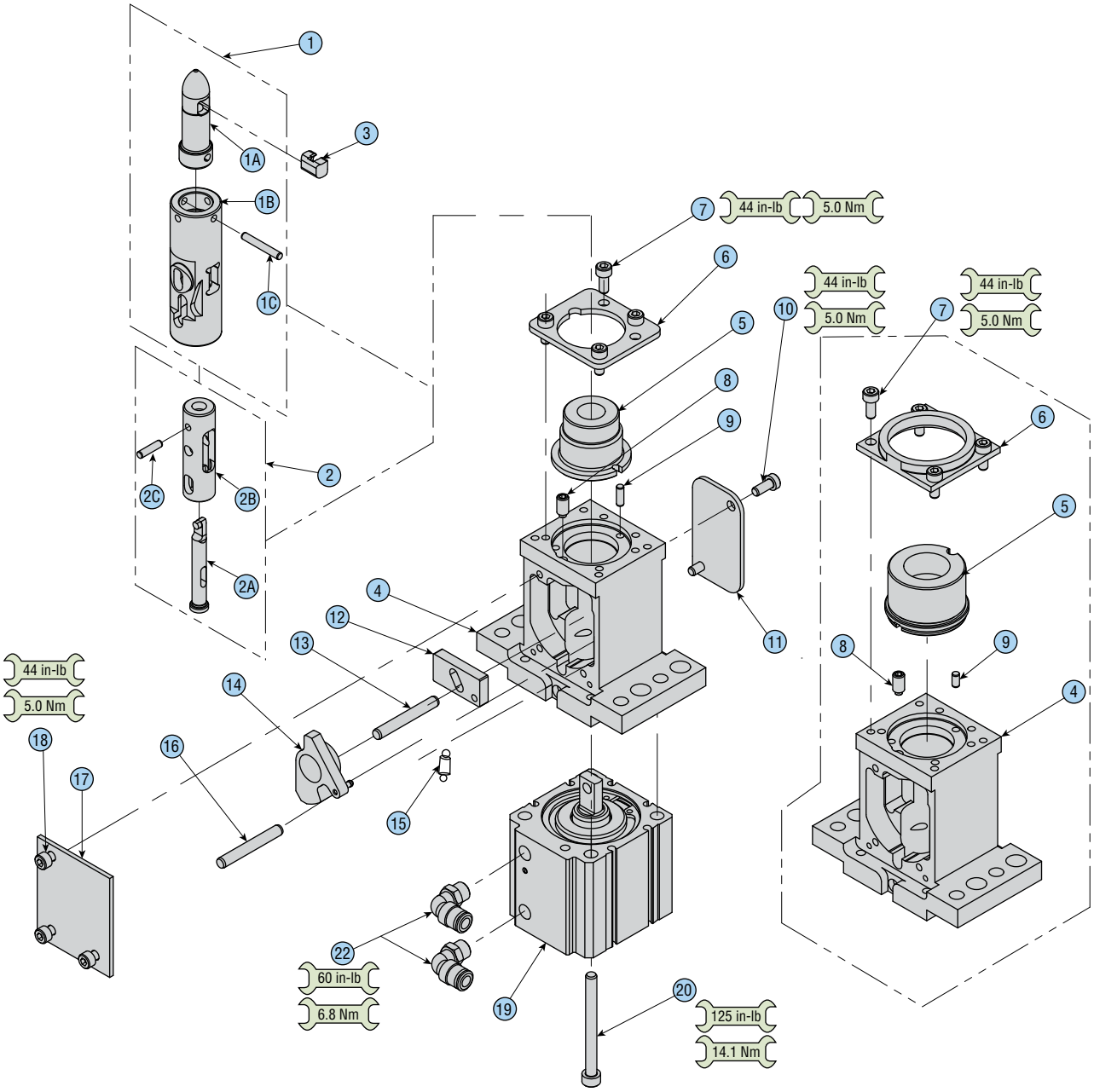

PART NUMBERS FOR PIN SIZE RANGE FROM 12.00 TO 21.99 mm

ITEM	QTY	DESCRIPTION			MODEL NUMBER					
					PLK5xx-x-12.00x-Exxx thru PLK5xx-x-14.99x-Exxx		PLK5xx-x-15.00x-Exxx thru PLK5xx-x-17.99x-Exxx		PLK5xx-x-18.00x-Exxx thru PLK5xx-x-21.99x-Exxx	
					IMPERIAL	METRIC	IMPERIAL	METRIC	IMPERIAL	METRIC
1	1	Assembly; Pin N Style		Std	79088-121-xxxx-Exxx	=	79088-151-xxxx-Exxx	=	79088-181-xxxx-Exxx	=
		1A	Pin Top	Std	79036-121-xxxx-Exxx	=	79036-151-xxxx-Exxx	=	79036-181-xxxx-Exxx	=
		1B	Pin Base		79103-01	=	79103-01	=	79103-01	=
		1C	Dowel Pin		17831-081	=	17831-081	=	17831-081	=
		Assembly; Pin C Style		Std	79089-121-xxxx-Exxx	=	79089-151-xxxx-Exxx	=	79089-181-xxxx-Exxx	=
		1A	Pin Top	Std	79046-121-xxxx-Exxx	=	79046-151-xxxx-Exxx	=	79046-181-xxxx-Exxx	=
		1B	Pin Base		79103-01	=	79103-01	=	79103-01	=
		1C	Dowel Pin		17831-081	=	17831-081	=	17831-081	=
		Assembly; Pin B Style		Std	79090-121-xxxx-Exxx	=	79090-151-xxxx-Exxx	=	79090-181-xxxx-Exxx	=
		1A	Pin Top	Std	79056-121-xxxx-Exxx	=	79056-151-xxxx-Exxx	=	79056-181-xxxx-Exxx	=
		1B	Pin Base		79103-01	=	79103-01	=	79103-01	=
		1C	Dowel Pin		17831-081	=	17831-081	=	17831-081	=
2	1	Assembly; Drive Rod		FDxS	79086-1-Exxx	=	79086-2-Exxx	=	79086-2-Exxx	=
		2A	Drive Rod Top	FDxS	79105-01-Exxx	=	79107-01-Exxx	=	79107-01-Exxx	=
		2B	Drive Rod Base		79100-01	=	79100-01	=	79100-01	=
		2C	Dowel Pin		17831-001	=	17831-001	=	17831-001	=
		Assembly; Drive Rod		FDxD	N/A	N/A	79087-2-Exxx	=	79087-2-Exxx	=
		2A	Drive Rod Top	FDxD	N/A	N/A	79111-01-Exxx	=	79111-01-Exxx	=
		2B	Drive Rod Base		N/A	N/A	79100-01	=	79100-01	=
		2C	Dowel Pin		N/A	N/A	17831-001	=	17831-001	=
3	1	Finger, Single FDxS		Std	79070-121-xxxx	=	79070-151-xxxx	=	79070-181-xxxx	=
	2	Finger Dual FDxD		Std	N/A	N/A	79073-151-xxxx	=	79073-181-xxxx	=
4	1	Assembly; Housing		505	79085-01-01	=	79085-01-01	=	79085-01-01	=
	1	Assembly; Housing		510	79085-02-01	=	79085-02-01	=	79085-02-01	=
5	1	Part Support			79115-12-xxxx-Exxx	=	79115-15-xxxx-Exxx	=	79115-18-xxxx-Exxx	=
6	1	Flange, Part Support			79126-01	=	79126-01	=	79126-01	=
7	4	SHCS, Flange Mounting			59104-099	=	59104-099	=	59104-099	=
8	1	Socket Set Screw			17424-136	=	17424-136	=	17424-136	=
9	1	Dowel Pin			17831-078	=	17831-078	=	17831-078	=
10	2	Cover Plate Mounting Screw			59104-416	=	59104-416	=	59104-416	=
11	1	Rear Cover Plate			79129-01	=	79129-01	=	79129-01	=
12	1	Sequence Cam			79958-01	=	79958-01	=	79958-01	=
13	1	Dowel Pin			17831-059	=	17831-059	=	17831-059	=
14	1	Assembly; Lock Bracket			79945-01	=	79945-01	=	79945-01	=
15	1	Tension Spring			2579-045	=	2579-045	=	2579-045	=
16	1	Dowel Pin			17831-059	=	17831-059	=	17831-059	=
17	1	Cover Plate			79128-00	=	79128-00	=	79128-00	=
18	3	Cover Plate Mounting Screw			59104-021	=	59104-021	=	59104-021	=
19	1	Assembly; Cylinder without Magnet		Std	79135-01-01-01-1	79135-02-01-01-1	79135-01-01-01-1	79135-02-01-01-1	79135-01-01-01-1	79135-02-01-01-1
				-R02 (Dbl Rod)	79135-01-02-01-1	79135-02-02-01-1	79135-01-02-01-1	79135-02-02-01-1	79135-01-02-01-1	79135-02-02-01-1
				-R01 (Flag Rod)	79135-01-03-01-1	79135-02-03-01-1	79135-01-03-01-1	79135-02-03-01-1	79135-01-03-01-1	79135-02-03-01-1
		Assembly; Cylinder with SW00, 41, 42, 51, 52		Std	79135-01-01-02-1	79135-02-01-02-1	79135-01-01-02-1	79135-02-01-02-1	79135-01-01-02-1	79135-02-01-02-1
				-R02 (Dbl Rod)	79135-01-02-02-1	79135-02-02-02-1	79135-01-02-02-1	79135-02-02-02-1	79135-01-02-02-1	79135-02-02-02-1
				-R01 (Flag Rod)	79135-01-03-02-1	79135-02-03-02-1	79135-01-03-02-1	79135-02-03-02-1	79135-01-03-02-1	79135-02-03-02-1
20	4	Cylinder Mounting Screws			59104-126	=	59104-126	=	59104-126	=
22	—	Port Fittings		Std	N/A	N/A	N/A	N/A	N/A	N/A
	2			-LAA	62178-003	62195-005	62178-003	62195-005	62178-003	62195-005
	2			-LBB	71120-001	71121-001	71120-001	71121-001	71120-001	71121-001

NOTES: 1) = denotes the same part number as imperial 2) N/A denotes not applicable

(parts list continued on next page)

PART NUMBERS FOR PIN SIZE RANGE FROM 22.00 TO 30.00 mm

ITEM	QTY	DESCRIPTION			MODEL NUMBER			
					PLK5xx-x-22.00x-Exxx thru PLK5xx-x-24.99x-Exxx		PLK5xx-x-25.00x-Exxx thru PLK5xx-x-30.00x-Exxx	
					IMPERIAL	METRIC	IMPERIAL	METRIC
1	1	Assembly; Pin N Style		Std	79088-221-xxxx-Exxx	=	79088-251-xxxx-Exxx	=
		1A	Pin Top	Std	79036-221-xxxx-Exxx	=	79036-251-xxxx-Exxx	=
		1B	Pin Base		79103-01	=	79103-01	=
		1C	Dowel Pin		17831-081	=	17831-081	=
		Assembly; Pin C Style		Std	79089-221-xxxx-Exxx	=	79089-251-xxxx-Exxx	=
		1A	Pin Top	Std	79046-221-xxxx-Exxx	=	79046-251-xxxx-Exxx	=
		1B	Pin Base		79103-01	=	79103-01	=
		1C	Dowel Pin		17831-081	=	17831-081	=
		Assembly; Pin B Style		Std	79090-221-xxxx-Exxx	=	79090-251-xxxx-Exxx	=
		1A	Pin Top	Std	79056-221-xxxx-Exxx	=	79056-251-xxxx-Exxx	=
		1B	Pin Base		79103-01	=	79103-01	=
		1C	Dowel Pin		17831-081	=	17831-081	=
2	1	Assembly; Drive Rod		FDxS	79086-3-Exxx	=	79086-3-Exxx	=
		2A	Drive Rod Top	FDxS	79108-01-Exxx	=	79108-01-Exxx	=
		2B	Drive Rod Base		79100-01	=	79100-01	=
		2C	Dowel Pin		17831-001	=	17831-001	=
		Assembly; Drive Rod		FDxD	79087-3-Exxx	=	79087-3-Exxx	=
		2A	Drive Rod Top	FDxD	79112-01-Exxx	=	79112-01-Exxx	=
		2B	Drive Rod Base		79100-01	=	79100-01	=
		2C	Dowel Pin		17831-001	=	17831-001	=
3	1	Finger, Single FDxS		Std	79070-221-xxxx	=	79070-251-xxxx	=
	2	Finger Dual FDxD		Std	79073-221-xxxx	=	79073-251-xxxx	=
4	1	Assembly; Housing		505	79085-01-01	=	79085-01-02	=
	1	Assembly; Housing		510	79085-02-01	=	79085-02-02	=
5	1	Part Support			79115-22-xxxx-Exxx	=	79115-25-xxxx-Exxx	=
6	1	Flange, Part Support			79126-01	=	79126-20	=
7	4	SHCS, Flange Mounting			59104-099	=	59104-099	=
8	1	Socket Set Screw			17424-136	=	17424-136	=
9	1	Dowel Pin			17831-078	=	17831-078	=
10	2	Cover Plate Mounting Screw			59104-416	=	59104-416	=
11	1	Rear Cover Plate			79129-01	=	79129-01	=
12	1	Sequence Cam			79958-01	=	79958-01	=
13	1	Dowel Pin			17831-059	=	17831-059	=
14	1	Assembly; Lock Bracket			79945-01	=	79945-01	=
15	1	Tension Spring			2579-045	=	2579-045	=
16	1	Dowel Pin			17831-059	=	17831-059	=
17	1	Cover Plate			79128-00	=	79128-00	=
18	3	Cover Plate Mounting Screw			59104-021	=	59104-021	=
19	1	Assembly; Cylinder without Magnet		Std	79135-01-01-01-1	79135-02-01-01-1	79135-01-01-01-1	79135-02-01-01-1
				-R02 (Dbl Rod)	79135-01-02-01-1	79135-02-02-01-1	79135-01-02-01-1	79135-02-02-01-1
				-R01 (Flag Rod)	79135-01-03-01-1	79135-02-03-01-1	79135-01-03-01-1	79135-02-03-01-1
		Assembly; Cylinder with SW00, 41, 42, 51, 52		Std	79135-01-01-02-1	79135-02-01-02-1	79135-01-01-02-1	79135-02-01-02-1
				-R02 (Dbl Rod)	79135-01-02-02-1	79135-02-02-02-1	79135-01-02-02-1	79135-02-02-02-1
				-R01 (Flag Rod)	79135-01-03-02-1	79135-02-03-02-1	79135-01-03-02-1	79135-02-03-02-1
20	4	Cylinder Mounting Screws			59104-126	=	59104-126	=
22	—	Port Fittings		Std	N/A	N/A	N/A	N/A
	2			-LAA	62178-003	62195-005	62178-003	62195-005
	2			-LBB	71120-001	71121-001	71120-001	71121-001

NOTES: 1) = denotes the same part number as imperial 2) N/A denotes not applicable

PLKD

DISAPPEARING PIN LOCATING CLAMPS

Major Benefits

- Completely enclosed finger/pin
- Available in pin diameters from 12.5 to 24.5 mm
- 5 or 10 mm clamping stroke
- NAAMS™ mounting
- Short pin length for blind applications
- Position sensing provides up to four position sensing with industry standard AC or DC weld field immune switch mounted in a protected housing. See options Px1xx and Dx1xx for details.
- New dual switch position sensing provides control feedback for all four clamp conditions (pin full extend, finger in/out, clamped, and pin full retract)
- Self-locking internal threads throughout eliminate need for thread locking adhesives or additional locking components

NEW
DUAL SWITCH

PLKD's locating pin retracts fully into part support, allowing greater ease of panel removal

PLKD's weld field immune switch options provide consistent position sensing

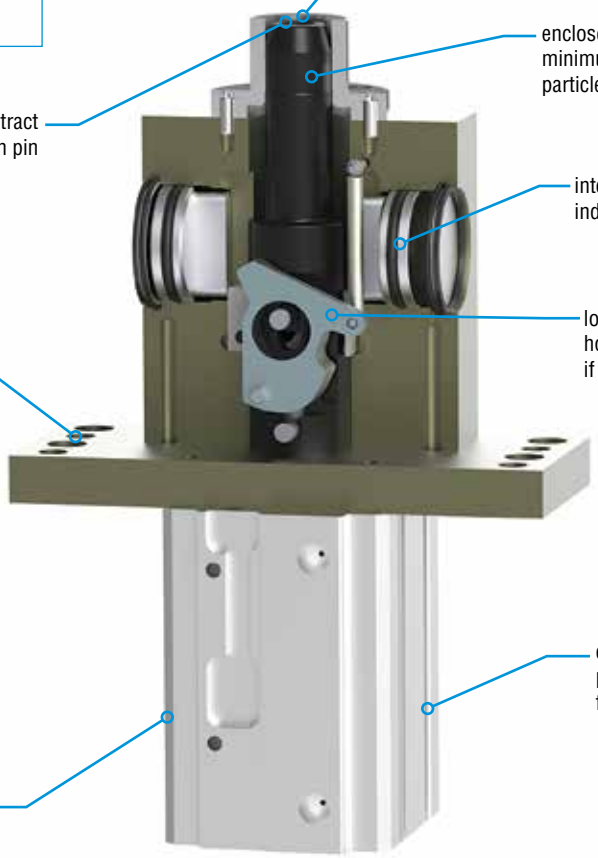

CAD & Sizing Assistance

Use PHD's free online Product Sizing and CAD Configurator at www.phdinc.com/myphd

TO ORDER, SPECIFY:
Model, Unit Size and Stroke, Design No., Pin Size, Material Thickness, and Additional Options if desired.

NOTES:
1) To have the lock preset for sheet metal thickness, order MT and (the thickness).
   Lock may be preset at factory for material thickness in 0.1 mm [0.004 in] increments.
   MT11 would be for 1.1 mm material, MT20 would be for 2.0 mm material.
   Lock range is from 0 to 4.0 mm [0 to 0.157 in].
   Unless otherwise specified, factory lock default setting is MT20.
   NEW adjustment procedure. See pages 23 and 32.
2) Magnet will be installed if cylinder switches are ordered.
3) Metric units have metric ports, imperial units have imperial ports.

PIN SIZE/STYLE
1250B - 12.50 mm dia. Pin with -0.05 mm Tolerance
1550B - 15.50 mm dia. Pin with -0.05 mm Tolerance
1850B - 18.50 mm dia. Pin with -0.05 mm Tolerance
2450B - 24.50 mm dia. Pin with -0.05 mm Tolerance

PORT POSITION
BLANK - (PP1) Standard Position 1
PP2 - Position 2
PP3 - Position 3
PP4 - Position 4
Ports in Position 1 required for PS/PRxxx and DS/DRxxx.

SWITCH OPTIONS
BLANK - No Sensor
Px1xx - Position Sensor (See Position Sensor Option Code)
Dx1xx - Dual Position Sensor

MISCELLANEOUS OPTIONS
BLANK - None
R01 - Sensor Flag
FR2 - Manual Finger Retract

MODEL
PLKD - Disappearing Pin Clamp

DESIGN NO.
1 - Imperial
5 - Metric

PLKD 505 - 1 - 1850B - MT07 - [ ] - [ ] - LAA - PS1D9 - R01 - SW00

UNIT SIZE / CLAMP STROKE
505 - 50 mm Bore 5 mm Stroke
510 - 50 mm Bore 10 mm Stroke

MATERIAL THICKNESS LOCK ADJUSTMENT (See Note 1)
MT07 - (0.7 mm) 0.027 in
MT10 - (1.0 mm) 0.039 in
MT40 - (4.0 mm) 0.157 in

FINGER DIRECTION
BLANK - Standard Single Finger Position (FD4)
FD2 - Single Finger Position 2
Consult PHD for other finger directions.

PORT FITTINGS (BOTH PORTS)
BLANK - No Fittings
LAA - 90° Swivel Elbow, Metal
LBB - 90° Swivel Elbow, Plastic

CYLINDER SWITCH OPTION
BLANK - No Magnet (see Note 2)
SW00 - Magnet for Switches Installed
SW41 - 1 NPN Switch Installed
SW42 - 2 NPN Switches Installed
SW51 - 1 PNP Switch Installed
SW52 - 2 PNP Switches Installed

POSITION SENSOR OPTION CODE

P S 1 D 9

HOUSING OPTION
P - Positional Sensing
D - Dual Positional Sensing

SENSING POSITION
S - Standard
R - Reversed

SWITCH HOUSING POSITION
1 - Position 1

SWITCH OPTION
N - No Switch
A - 5-Pin AC/DC Switch (Turck)
D - 4-Pin DC Switch (P + F)
E - 4-Pin DC Switch (Turck)
F - 4-Pin DC Switch (Efector)
H - 4-Pin DC Switch (P + F)
J - 4-Pin DC Switch (Turck)

CONNECTOR POSITION
1 - Parallel to Fingers
9 - Perpendicular to Fingers*

***NOTE:**
Connector position 9 is not available with switch option A.

NEW
DUAL SWITCH

ENGINEERING DATA: *SERIES PLKD CLAMPS*

SPECIFICATIONS	SERIES PLKD
SEALS	Polyurethane
OPERATING TEMPERATURE	-20° to +180°F [-28° to +82°C]
LUBRICATION	Factory lubricated for life

MODEL	UNIT WEIGHT		CLAMP FORCE 87 psi [6 bar]		CLAMP FORCE FACTOR Cf		MAIN PIN UNCLAMP OR CLAMP TIME 87 psi [6 bar]	FINGER RETRACT OR EXTEND TIME 87 psi [6 bar]	MAIN PIN POWER CYLINDER DISPLACEMENT				FINGER POWER CYLINDER DISPLACEMENT			
									CLAMP		UNCLAMP		EXTEND		RETRACT	
	lb	kg	lb	N	imperial	metric	sec	sec	in³	cm³	in³	cm³	in³	cm³	in³	cm³
PLKD505-x-1250B	5.5	2.49	223	991	2.56	165	0.5	0.3	3.85	63.0	4.60	75.4	0.26	4.3	0.26	4.3
PLKD505-x-1550B	5.5	2.49	223	991	2.56	165	0.5	0.3	3.85	63.0	4.60	75.4	0.26	4.3	0.26	4.3
PLKD505-x-1850B	5.7	2.56	223	991	2.56	165	0.5	0.3	3.85	63.0	4.60	75.4	0.26	4.3	0.26	4.3
PLKD505-x-2450B	6.0	2.72	223	991	2.56	165	0.5	0.3	3.85	63.0	4.60	75.4	0.26	4.3	0.26	4.3
PLKD510-x-1250B	5.5	2.49	223	991	2.56	165	0.5	0.3	4.30	70.5	5.20	85.3	0.26	4.3	0.26	4.3
PLKD510-x-1550B	5.5	2.49	223	991	2.56	165	0.5	0.3	4.30	70.5	5.20	85.3	0.26	4.3	0.26	4.3
PLKD510-x-1850B	5.7	2.56	223	991	2.56	165	0.5	0.3	4.30	70.5	5.20	85.3	0.26	4.3	0.26	4.3
PLKD510-x-2450B	6.0	2.72	223	991	2.56	165	0.5	0.3	4.30	70.5	5.20	85.3	0.26	4.3	0.26	4.3

DIMENSIONS: *SERIES PLKD CLAMPS*

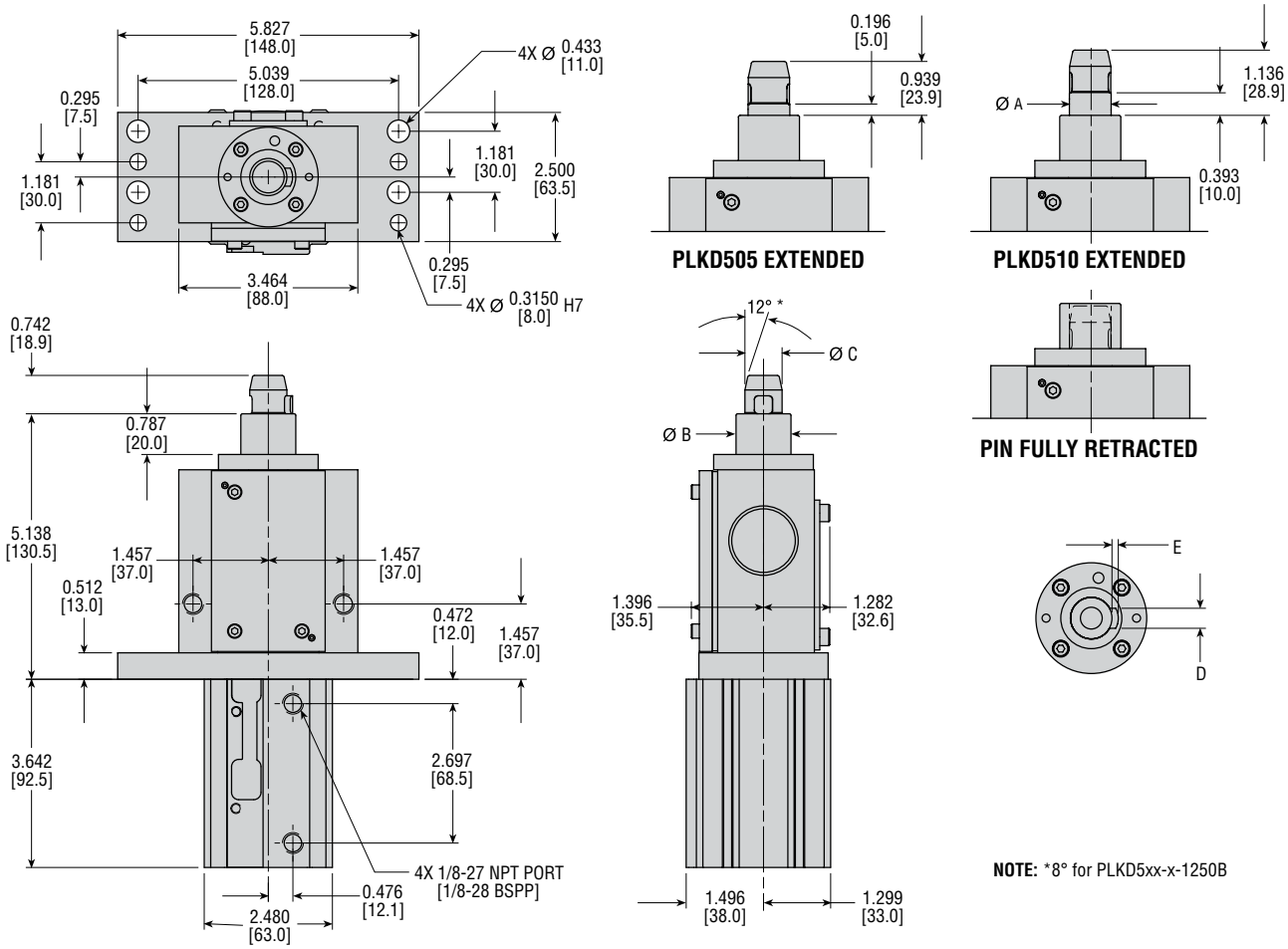

NOTE: *8° for PLKD5xx-x-1250B

DIMENSION	MODEL NUMBER							
	PLKD5xx-x-1250B		PLKD5xx-x-1550B		PLKD5xx-x-1850B		PLKD5xx-x-2450B	
	in	mm	in	mm	in	mm	in	mm
A MAX	0.4921	12.50	0.6102	15.50	0.7283	18.50	0.9646	24.50
A MIN	0.4902	12.45	0.6083	15.45	0.7264	18.45	0.9626	24.45
B	0.984	25.00	0.984	25.00	1.063	27.00	1.378	35.00
C	0.4829	12.27	0.6010	15.27	0.7191	18.27	0.9553	24.26
D	0.239	6.07	0.349	8.86	0.349	8.86	0.349	8.86
E	0.075	1.91	0.108	2.75	0.108	2.75	0.108	2.75

All dimensions are reference only unless specifically toleranced.

MTxx MATERIAL THICKNESS ADJUSTMENT

Provides the clamp with the adjustable lock already set for the maximum material thickness for the application. Specify the thickest material.

Example: 1.6 mm material = MT16

Specify MT16 and the clamp will arrive preset to lock at that material thickness. The sequenced design prevents the finger from retracting until the pin is fully extended. The part can move the amount of clearance between the lock bracket and adjustment screw, but the extended finger keeps the part trapped securely on the pin.

Unless otherwise specified, the factory lock default setting is MT20 = 2.0 mm material.

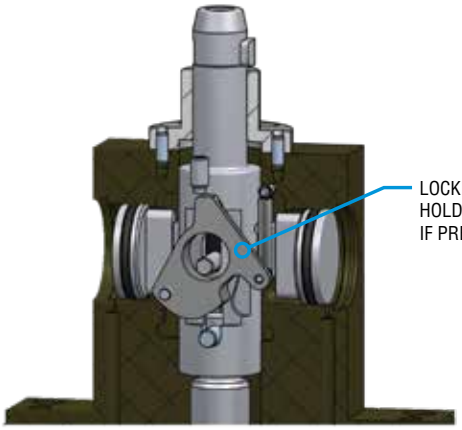

FDx FINGER DIRECTION

Provides alternate finger directions for flexibility and customer convenience. For FD1 and FD3, consult factory for delivery.

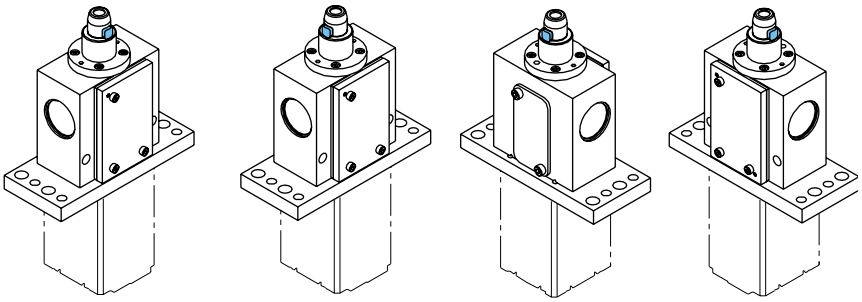

FD1 FD2 FD3 FD4 (STANDARD)

PPx PORT LOCATION

Provides alternate port locations for the cylinder providing flexibility and customer convenience. If PS/DS or PR/DR switches are ordered, ports must be on side 1.

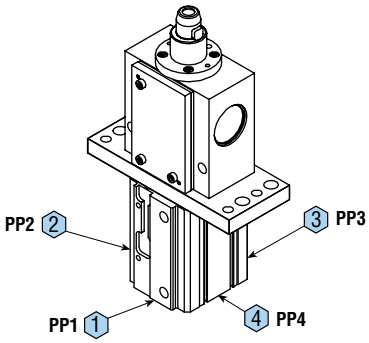

Lxx PORT FITTINGS

LAA (metal) or LBB (plastic) accessory provides 90° swivel fittings for ease of air line hook up.

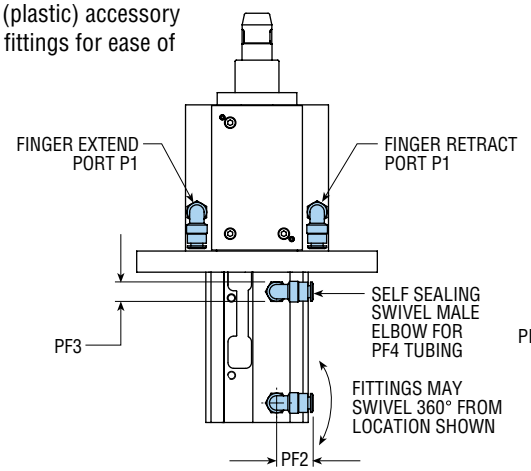

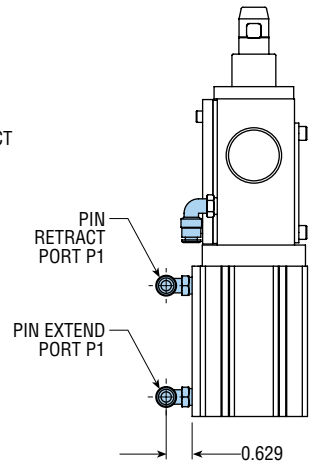

LETTER DIM	MODEL NUMBER PLKD5xx	
	in	mm
P1	1/8 NPT	1/8 BSPP
PF1	0.629	16.0
PF2	0.885	22.5
PF3 -LAA	0.472	12.0
-LBB	0.473	12.1
PF4 -LAA	1/4	6.0
-LBB	1/5	6.0

OPTION CODE	PART NUMBER	
	IMPERIAL	METRIC
LAA	62178-003	62195-005
LBB	71120-001	71121-001

All dimensions are reference only unless specifically toleranced.

PS1xx STANDARD POSITION SENSING

PR1xx REVERSED POSITION SENSING

This option provides sensing by affixing an aluminum housing to the side of the clamp body.

Full retract is fixed, needing no adjustment. The clamp switch is adjustable throughout the entire clamp stroke. Loosening the M5 screw and sliding it up or down adjusts the clamp switch position.

See diagrams for satellite switch to quick disconnect pin number on page 28.

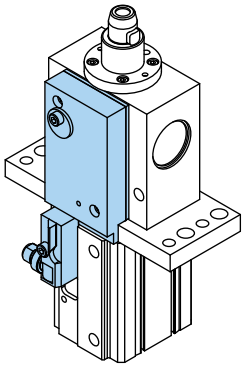

2-SENSING CONDITIONS

POSITION SENSOR OPTION CODE

P S 1 D 9

HOUSING OPTION	SENSING POSITION	SWITCH HOUSING POSITION	SWITCH OPTION	CONNECTOR POSITION
P - Positional Sensing	S - Standard R - Reversed	1 - Position 1	N - No Switch A - 5-Pin AC/DC Switch (Turck) D - 4-Pin DC Switch (P + F) E - 4-Pin DC Switch (Turck) F - 4-Pin DC Switch (Efector) H - 4-Pin DC Switch (P + F) J - 4-Pin DC Switch (Turck)	1 - Parallel to Fingers 9 - Perpendicular to Fingers*

***NOTE:**
Connector position 9 is not available with switch option A.

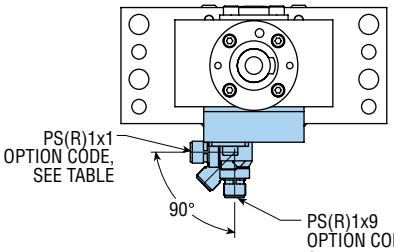

OPTION CODE	CABLE CONNECTION
PS(R)1A1	1/2-20 UNF
PS(R)1D1(9)	M12 x 1
PS(R)1E1(9)	M12 x 1
PS(R)1F1(9)	M12 x 1
PS(R)1H1(9)	M12 x 1
PS(R)1J1(9)	M12 x 1

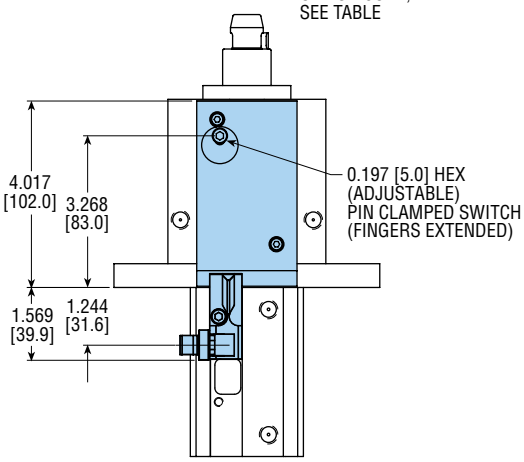

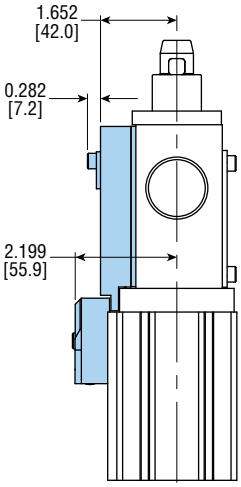

SWITCH NUMBERS IF ORDERED SEPARATELY

SWITCH OPTION	SWITCH TYPE	PHD SWITCH NUMBER	VENDOR	VENDOR PART NUMBER
A	5-pin AC/DC	71483-002-PLKD	Turck	Ni 2-Q6.5-ADZ32-0.16-FSB 5.4X4/S304
D	4 -pin DC - PNP	71483-001-PLKD	P & F	NBN2-F581-160S6-E8-V1
E	4-pin DC - PNP	71483-003-PLKD	Turck	Ni 2-Q6.5-0.16-BDS-2AP6X3-H1141/S34
F	4-pin DC - PNP	71483-004-PLKD	Efector	IN 5375
H	4-pin DC - NPN	71483-005-PLKD	Turck	NBN2-F581-160S6-E10-V1
J	4-pin DC - NPN	71483-006-PLKD	Turck	Ni 2-Q6.5-AN6-0.16-FS 4.4X3/S304

MATCHING CORDSETS 2 METERS LONG

SWITCH OPTION	PHD PART NUMBER	CORDSET PART NUMBER
A	73317-00-02	KB 5T-2
D	65440-001-02	V1-G-YE2M-PVC
E	78039-00-02	RK 4.4T-2
F	65440-001-02	V1-G-YE2M-PVC
H	65440-001-02	V1-G-YE2M-PVC
J	78039-00-02	RK 4.4T-2

SWITCH HOUSING KIT

SERIES	KIT NUMBER
PLKD	79947-05

Kit includes: housing, plate, all pins and screws required for installation. Switches sold separately.

All dimensions are reference only unless specifically toleranced.

DS1xx DUAL STANDARD POSITION SENSING

DR1xx DUAL REVERSED POSITION SENSING

This option provides dual sensing by affixing two switches to the side of the clamp body.

Pin up/finger in, pin up/finger out, and full retract is fixed, needing no adjustment. The clamp switch is adjustable throughout the entire clamp stroke. Loosening the M5 screw and sliding it up or down adjusts the clamp switch position.

See the following pages for switch sensing conditions/logic.

Consult PHD for wiring configurations not listed.

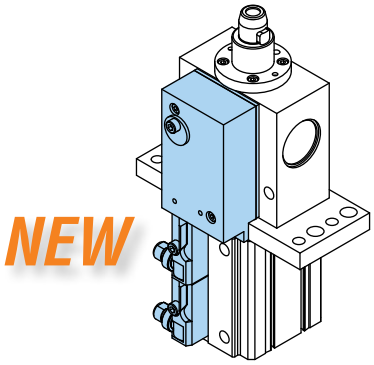

4-SENSING CONDITIONS

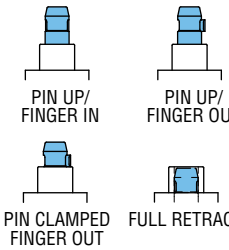

DUAL POSITION SENSOR OPTION CODE

D S 1 D 9

HOUSING OPTION	SENSING POSITION	SWITCH HOUSING POSITION	SWITCH OPTION	CONNECTOR POSITION
D - Dual Positional Sensing	S - Standard R - Reversed	1 - Position 1	N - No Switch A - 5-Pin AC/DC Switch (Turck) D - 4-Pin DC Switch (P + F) E - 4-Pin DC Switch (Turck) F - 4-Pin DC Switch (Efector) H - 4-Pin DC Switch (P + F) J - 4-Pin DC Switch (Turck)	1 - Parallel to Fingers 9 - Perpendicular to Fingers*

***NOTE:**
Connector position 9 is not available with switch option A.

OPTION CODE	CABLE CONNECTION
DS(R)1A1	1/2-20 UNF
DS(R)1D1(9)	M12 x 1
DS(R)1E1(9)	M12 x 1
DS(R)1F1(9)	M12 x 1
DS(R)1H1(9)	M12 x 1
DS(R)1J1(9)	M12 x 1

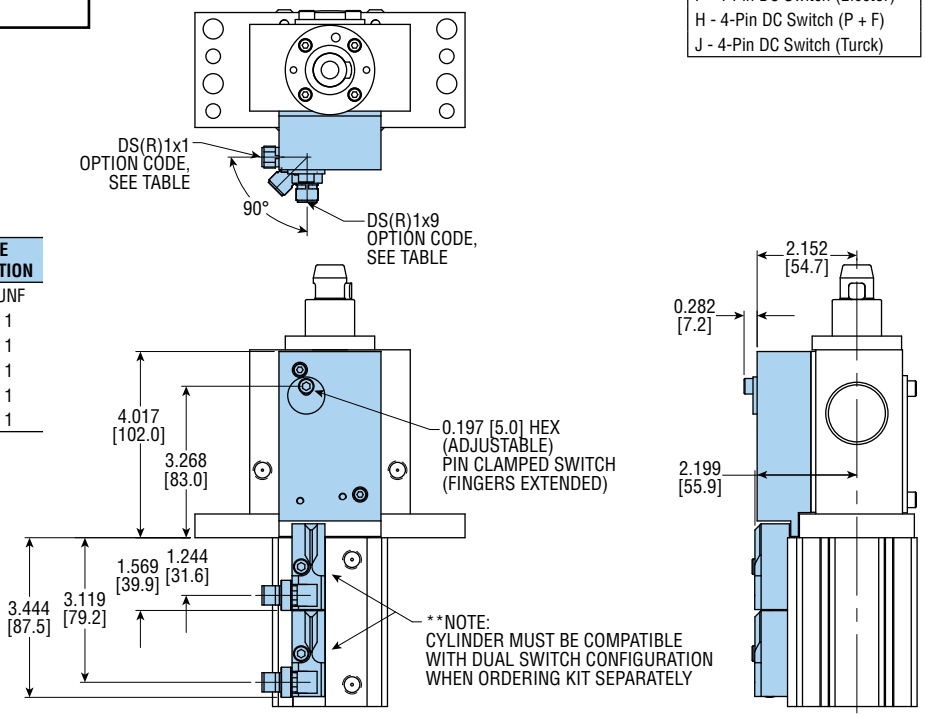

SWITCH NUMBERS IF ORDERED SEPARATELY*

SWITCH OPTION	SWITCH TYPE	PHD SWITCH NUMBER	VENDOR	VENDOR PART NUMBER
A	5-pin AC/DC	71483-002-PLKD	Turck	Ni 2-Q6.5-ADZ32-0.16-FSB 5.4X4/S304
D	4 -pin DC - PNP	71483-001-PLKD	P & F	NBN2-F581-160S6-E8-V1
E	4-pin DC - PNP	71483-003-PLKD	Turck	Ni 2-Q6.5-0.16-BDS-2AP6X3-H1141/S34
F	4-pin DC - PNP	71483-004-PLKD	Efector	IN 5375
H	4-pin DC - NPN	71483-005-PLKD	Turck	NBN2-F581-160S6-E10-V1
J	4-pin DC - NPN	71483-006-PLKD	Turck	Ni 2-Q6.5-AN6-0.16-FS 4.4X3/S304

*Two switches required for Dx1xx option.

MATCHING CORDSETS 2 METERS LONG

SWITCH OPTION	PHD PART NUMBER	CORDSET PART NUMBER
A	73317-00-02	KB 5T-2
D	65440-001-02	V1-G-YE2M-PVC
E	78039-00-02	RK 4.4T-2
F	65440-001-02	V1-G-YE2M-PVC
H	65440-001-02	V1-G-YE2M-PVC
J	78039-00-02	RK 4.4T-2

SWITCH HOUSING KIT

SERIES	KIT NUMBER
PLKD	79947-14

Kit includes: housing, bracket, all pins and screws required for installation. Switches sold separately (two required).
**See cylinder note.

All dimensions are reference only unless specifically toleranced.

-DS1xx STANDARD POSITION SENSING

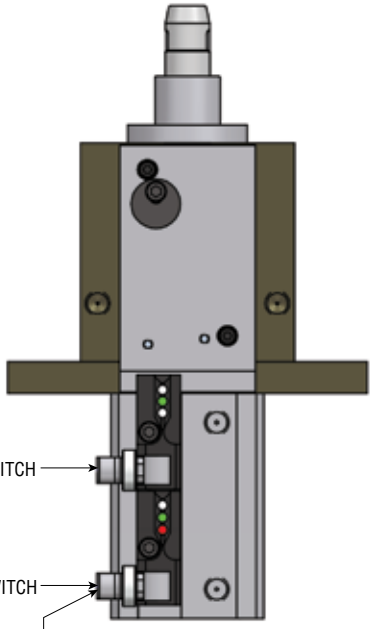

PIN UP FINGER IN

PIN UP (FINGER IN) LOWER SWITCH
DS1xx OPTION (RED LED)

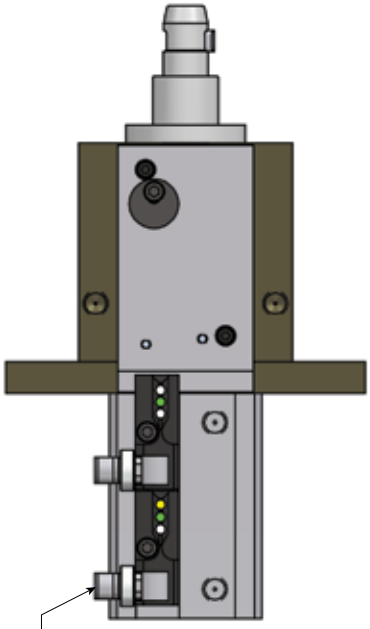

PIN UP FINGER OUT

PIN UP (FINGER OUT) LOWER SWITCH
DS1xx OPTION (YELLOW LED)

4-PIN DC

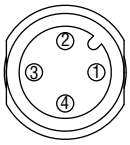

5-PIN AC/DC

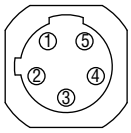

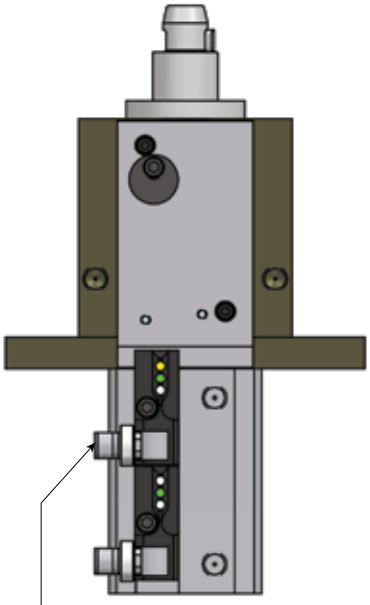

CLAMPED

CLAMPED UPPER SWITCH
DS1xx OPTION (YELLOW LED)

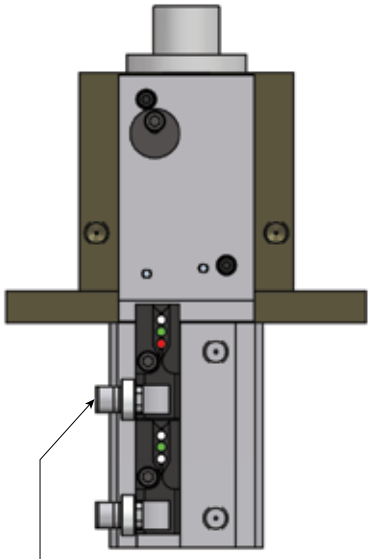

FULLY RETRACTED

PIN FULLY RETRACTED UPPER SWITCH
DS1xx OPTION (RED LED)

LED	LED COLOR INDICATOR
YELLOW	OUTPUT = S01
GREEN	POWER
RED	OUTPUT = S02

DS1xx LOGIC CHART

SWITCH STYLE	OPTION CODE	PIN UP FINGER IN	PIN UP FINGER OUT	CLAMPED	FULLY RETRACTED
4-wire AC/DC	-DS1A1	Lower S02/Pin 4	Lower S01/Pin 5	Upper S01/Pin 5	Upper S02/Pin 4
4-wire DC (PNP)	-DS1Dx	Lower S2/Pin 2	Lower S1/Pin 4	Upper S1/Pin 4	Upper S2/Pin 2
4-wire DC (NPN)	-DS1Hx	Lower S2/Pin 2	Lower S1/Pin 4	Upper S1/Pin 4	Upper S2/Pin 2
4-wire DC (PNP)	-DS1Ex	Lower S02/Pin 2	Lower S01/Pin 4	Upper S01/Pin 4	Upper S02/Pin 2
4-wire DC (NPN)	-DS1Jx	Lower S02/Pin 2	Lower S01/Pin 4	Upper S01/Pin 4	Upper S02/Pin 2
4-wire DC (PNP)	-DS1Fx	Lower S2/Pin 2	Lower S1/Pin 4	Upper S1/Pin 4	Upper S2/Pin 2
		Upper Switch	Upper Switch	Upper Switch	Upper Switch
		Lower Switch	Lower Switch	Lower Switch	Lower Switch

-DR1xx REVERSED POSITION SENSING

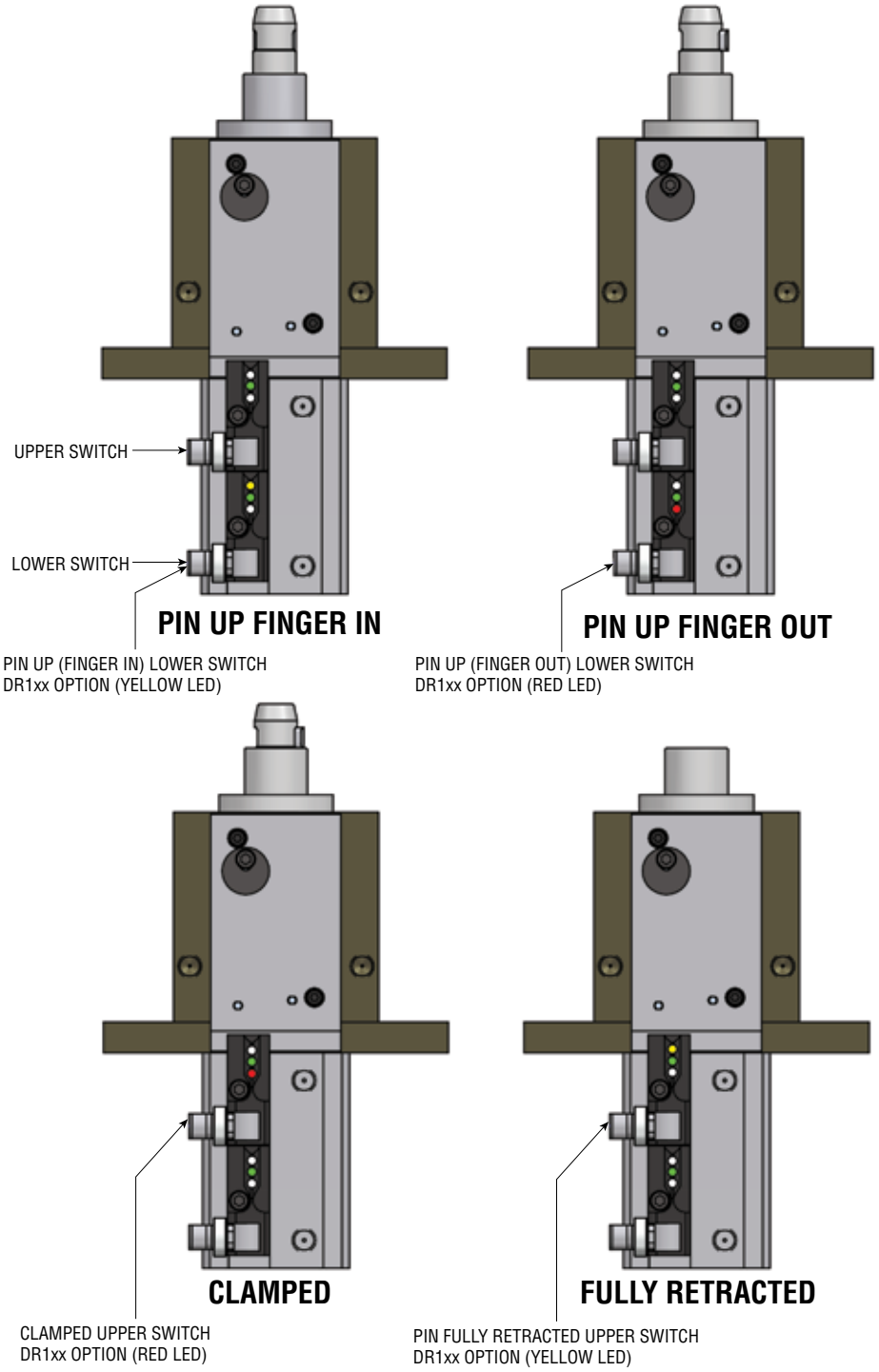

4-PIN DC

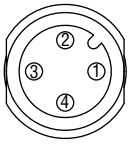

5-PIN AC/DC

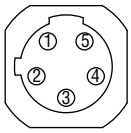

LED	LED COLOR INDICATOR
YELLOW	OUTPUT = S01
GREEN	POWER
RED	OUTPUT = S02

DR1xx LOGIC CHART

SWITCH STYLE	OPTION CODE	PIN UP FINGER IN	PIN UP FINGER OUT	CLAMPED	FULLY RETRACTED
4-wire AC/DC	-DR1A1	Lower S01/Pin 5	Lower S02/Pin 4	Upper S02/Pin 4	Upper S01/Pin 5
4-wire DC (PNP)	-DR1Dx	Lower S1/Pin 4	Lower S2/Pin 2	Upper S2/Pin 2	Upper S1/Pin 4
4-wire DC (NPN)	-DR1Hx	Lower S1/Pin 4	Lower S2/Pin 2	Upper S2/Pin 2	Upper S1/Pin 4
4-wire DC (PNP)	-DR1Ex	Lower S01/Pin 4	Lower S02/Pin 2	Upper S02/Pin 2	Upper S01/Pin 4
4-wire DC (NPN)	-DR1Jx	Lower S01/Pin 4	Lower S02/Pin 2	Upper S02/Pin 2	Upper S01/Pin 4
4-wire DC (PNP)	-DR1Fx	Lower S1/Pin 4	Lower S2/Pin 2	Upper S2/Pin 2	Upper S1/Pin 4
		Upper Switch	Upper Switch	Upper Switch	Upper Switch
		Lower Switch	Lower Switch	Lower Switch	Lower Switch

POSITION SENSING SWITCH OPTIONS DIMENSIONS: *PLKD*

Refer to single and dual positional switch sensing charts on the following page.
For Dx1xx option: Two switches required if ordered separately.

SWITCH OPTION A 71483-002-PLKD Turck Part #: Ni 2-Q6.5-ADZ32-0.16-FSB 5.4X4/S304

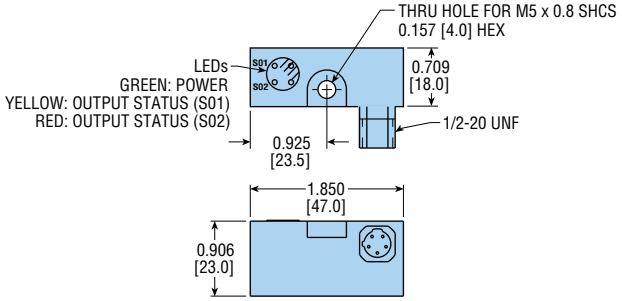

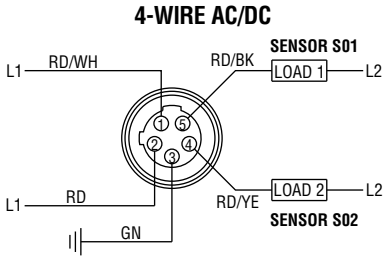

SWITCH OPTION D 71483-001-PLKD P + F Part #: NBN2-F581-160S6-E8-V1 (PNP)
SWITCH OPTION H 71483-005-PLKD P + F Part #: NBN2-F581-160S6-E10-V1 (NPN)

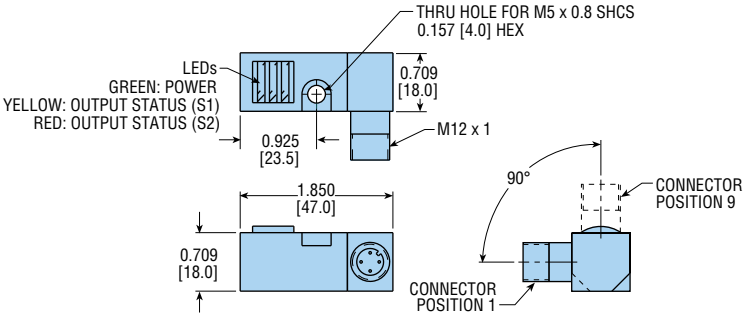

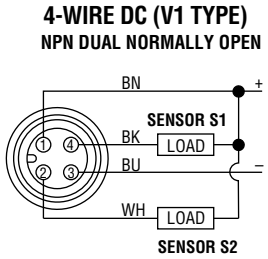

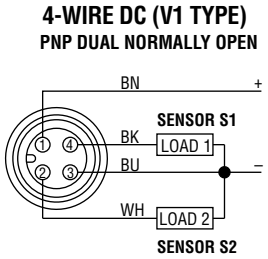

SWITCH OPTION E 71483-003-PLKD Turck Part #: Ni 2-Q6.5-0.16-BDS-2AP6X3-H1141/S34 (PNP)
SWITCH OPTION J 71483-006-PLKD Turck Part #: Ni 2-Q6.5-AN6-0.16-FS 4.4X3/S304 (NPN)

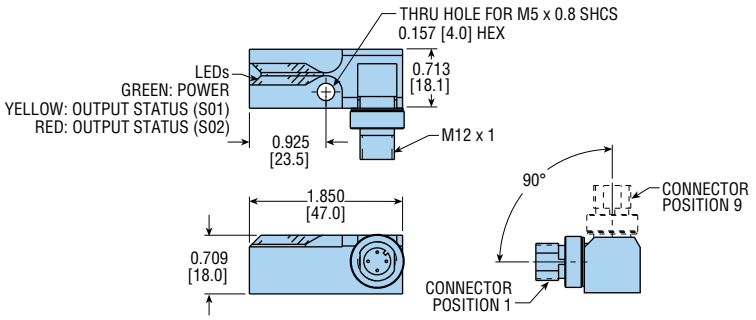

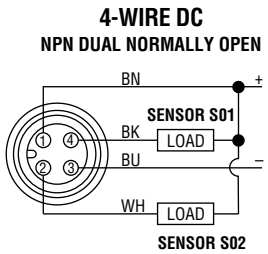

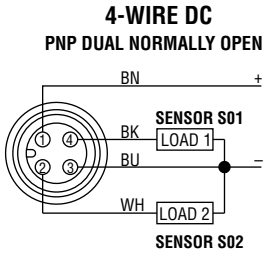

SWITCH OPTION F 71483-004-PLKD Efector Part #: IN 5375 (PNP)

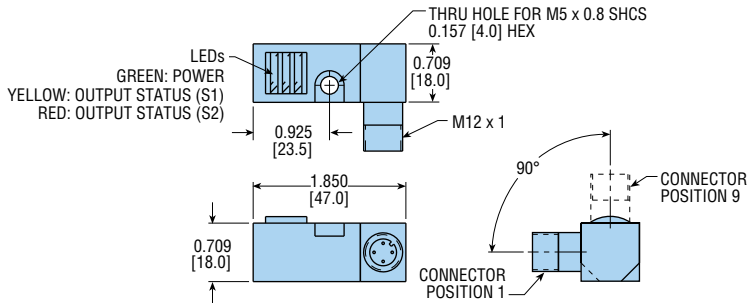

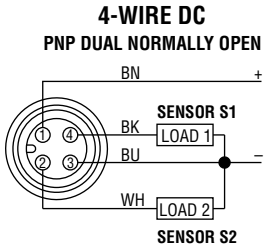

All dimensions are reference only unless specifically toleranced.

POSITION SENSING SWITCH OPTIONS CHARTS: *PLKD*

Refer to position switch sensing option dimensions on the previous page.
For Dx1xx option: Two switches required if ordered separately.

SWITCH OPTION A 71483-002-PLKD Turck Part #: Ni 2-Q6.5-ADZ32-0.16-FSB 5.4X4/S304

	OPTION CODE	SATELLITE		QUICK DISCONNECT PIN NUMBER
		FULL RETRACT	CLAMPED	
SINGLE SWITCH	PS1A1	S02	S01	S01 = Pin 5
	PR1A1	S01	S02	S02 = Pin 4

	OPTION CODE	SATELLITE				QUICK DISCONNECT PIN NUMBER
		FULL RETRACT	CLAMPED	PIN UP/FINGER IN	PIN UP/FINGER OUT	
DUAL SWITCH	DS1A1 (Upper)	S02	S01	—	—	S01 = Pin 5 S02 = Pin 4
	DS1A1 (Lower)	—	—	S02	S01	
	DR1A1 (Upper)	S01	S02	—	—	
	DR1A1 (Lower)	—	—	S01	S02	

SWITCH OPTION D 71483-001-PLKD P + F Part #: NBN2-F581-160S6-E8-V1 (PNP)
SWITCH OPTION H 71483-005-PLKD P + F Part #: NBN2-F581-160S6-E10-V1 (NPN)

	OPTION CODE	SATELLITE		QUICK DISCONNECT PIN NUMBER
		FULL RETRACT	CLAMPED	
SINGLE SWITCH	PS1Dx or PS1Hx	S2	S1	S1 = Pin 4
	PR1Dx or PR1Hx	S1	S2	S2 = Pin 2

	OPTION CODE	SATELLITE				QUICK DISCONNECT PIN NUMBER
		FULL RETRACT	CLAMPED	PIN UP/FINGER IN	PIN UP/FINGER OUT	
DUAL SWITCH	DS1Dx or DS1Hx (Upper)	S2	S1	—	—	S1 = Pin 4 S2 = Pin 2
	DS1Dx or DS1Hx (Lower)	—	—	S2	S1	
	DR1Dx or DR1Hx (Upper)	S1	S2	—	—	
	DR1Dx or DR1Hx (Lower)	—	—	S1	S2	

SWITCH OPTION E 71483-003-PLKD Turck Part #: Ni 2-Q6.5-0.16-BDS-2AP6X3-H1141/S34 (PNP)
SWITCH OPTION J 71483-006-PLKD Turck Part #: Ni 2-Q6.5-AN6-0.16-FS 4.4X3/S304 (NPN)

	OPTION CODE	SATELLITE		QUICK DISCONNECT PIN NUMBER
		FULL RETRACT	CLAMPED	
SINGLE SWITCH	PS1Ex or PS1Jx	S02	S01	S01 = Pin 4
	PR1Ex or PR1Jx	S01	S02	S02 = Pin 2

	OPTION CODE	SATELLITE				QUICK DISCONNECT PIN NUMBER
		FULL RETRACT	CLAMPED	PIN UP/FINGER IN	PIN UP/FINGER OUT	
DUAL SWITCH	DS1Ex or DS1Jx (Upper)	S02	S01	—	—	S01 = Pin 4 S02 = Pin 2
	DS1Ex or DS1Jx (Lower)	—	—	S02	S01	
	DR1Ex or DR1Jx (Upper)	S01	S02	—	—	
	DR1Ex or DR1Jx (Lower)	—	—	S01	S02	

SWITCH OPTION F 71483-004-PLKD Efector Part #: IN 5375 (PNP)

	OPTION CODE	SATELLITE		QUICK DISCONNECT PIN NUMBER
		FULL RETRACT	CLAMPED	
SINGLE SWITCH	PS1Fx	S2	S1	S1 = Pin 4
	PR1Fx	S1	S2	S2 = Pin 2

	OPTION CODE	SATELLITE				QUICK DISCONNECT PIN NUMBER
		FULL RETRACT	CLAMPED	PIN UP/FINGER IN	PIN UP/FINGER OUT	
DUAL SWITCH	DS1Fx (Upper)	S2	S1	—	—	S1 = Pin 4 S2 = Pin 2
	DS1Fx (Lower)	—	—	S2	S1	
	DR1Fx (Upper)	S1	S2	—	—	
	DR1Fx (Lower)	—	—	S1	S2	

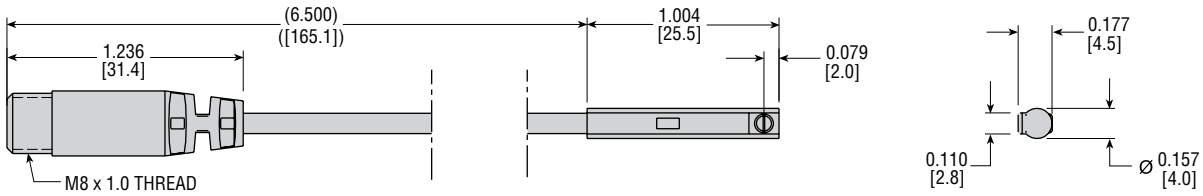

SW41 1 NPN SWITCH INSTALLED

SW42 2 NPN SWITCHES INSTALLED

PART NO.	DESCRIPTION
73360-01	Solid State NPN (Sink) 5 - 28V DC, 165 mm Cable with Quick Disconnect

SPECIFICATIONS	73360-01
SWITCHING LOGIC	Solid State Output, Normally Open
SENSOR TYPE	NPN Current Sinking
OPERATING VOLTAGE	5 - 28 VDC
SWITCHING CURRENT	200 mA max
SWITCHING RATING	6 W max
CURRENT CONSUMPTION	20 mA @ 24V max (Switch Active)
VOLTAGE DROP	0.5V @ 200 mA max
LEAKAGE CURRENT	0.01 mA max
INDICATOR	Red LED
CABLE	Ø 2.8, 3C, PVC
SENSITIVITY	40 Gauss
TEMPERATURE RANGE	-10° to 70°C
SHOCK	50G
VIBRATION	9G
ENCLOSURE CLASSIFICATION	IP67 (NEMA 6)
PROTECTION CIRCUIT	Power Source Reverse Polarity, Surge Suppression

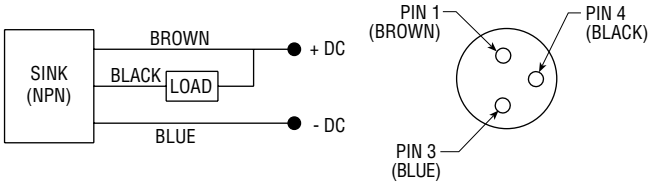

SW51 1 PNP SWITCH INSTALLED

SW52 2 PNP SWITCHES INSTALLED

PART NO.	DESCRIPTION
73360-02	Solid State PNP (Source) 5 - 28V DC, 165 mm Cable with Quick Disconnect

SPECIFICATIONS	73360-02
SWITCHING LOGIC	Solid State Output, Normally Open
SENSOR TYPE	PNP Current Sourcing
OPERATING VOLTAGE	5 - 28 VDC
SWITCHING CURRENT	200 mA max
SWITCHING RATING	6 W max
CURRENT CONSUMPTION	20 mA @ 24V max (Switch Active)
VOLTAGE DROP	0.5V @ 200 mA max
LEAKAGE CURRENT	0.01 mA max
INDICATOR	Green LED
CABLE	Ø 2.8, 3C, PVC
SENSITIVITY	40 Gauss
TEMPERATURE RANGE	-10° to 70°C
SHOCK	50G
VIBRATION	9G
ENCLOSURE CLASSIFICATION	IP67 (NEMA 6)
PROTECTION CIRCUIT	Power Source Reverse Polarity, Surge Suppression

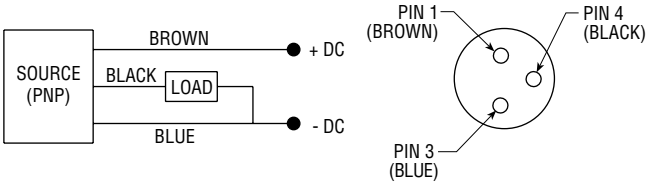

SWITCH SLOT LOCATIONS

When switches are ordered, they will be installed on side 2.

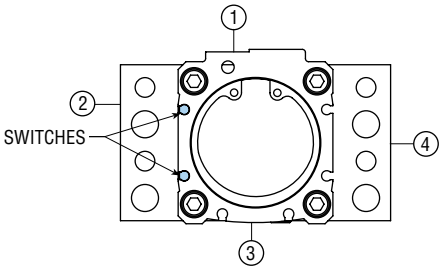

PLKD5xx

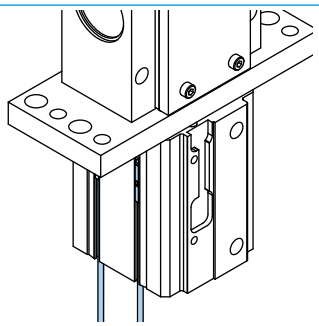

63549-xx CORDSET WITH FEMALE QUICK CONNECT

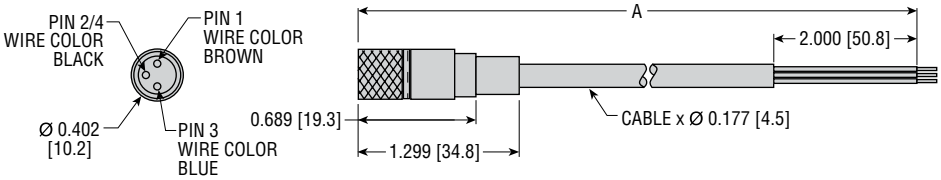

MODEL NO.	LETTER DIM. A
63549-02	78.74 [2 m]
63549-05	196.85 [5 m]

All dimensions are reference only unless specifically toleranced.

R01 SENSOR FLAG

Provides an external flag on a piston rod that extends out of the bottom of the clamp. The position of the flag indicates if the pin is extended or retracted. Flag travel varies with the panel thickness, 1 mm min. to 10 mm max. The white composite flag can be seen by optical sensing systems. Manually pushing the flag toward the clamp body will overcome the internal locking feature. When used with FR2 option on Series PLKD, pulling down manually will retract the pin below the top of the part support.

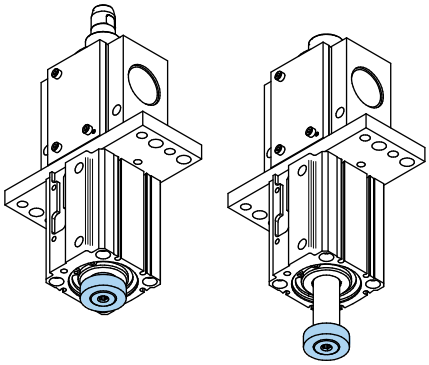

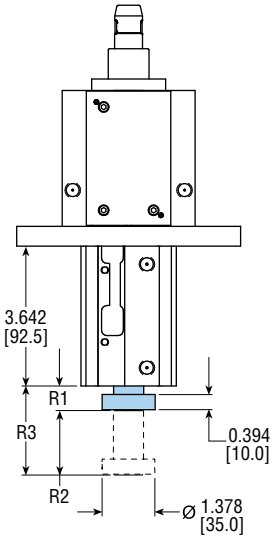

DIMENSION	MODEL NUMBER			
	PLKD505		PLKD510	
	in	mm	in	mm
R1	0.622	15.8	0.622	15.8
R2	1.506	38.3	1.703	43.3
R3	2.128	54.1	2.325	59.1

FR2 MANUAL FINGER RETRACT

Provides the ability to remove panels from the clamp by manually retracting the finger into the pin. Remove air pressure from the clamp ports and push the button in. As you do this, the finger will retract into the main pin and the part can be removed by pulling it up off the pin.

If used in conjunction with the R01 option and after the finger is retracted, pulling on the R01 flag will retract the pin below the top of the part support. This allows the part to be removed in any direction.

WITH FR2 OPTION:
Step 1: Push finger button in order to retract finger into pin
Step 2: Pull panel off top of pin

WITH FR2 AND R01 OPTION:
Step 1: Push finger button in order to retract finger into pin
Step 2: Pull flag out to retract pin below part support
Step 3: Remove panel in any direction

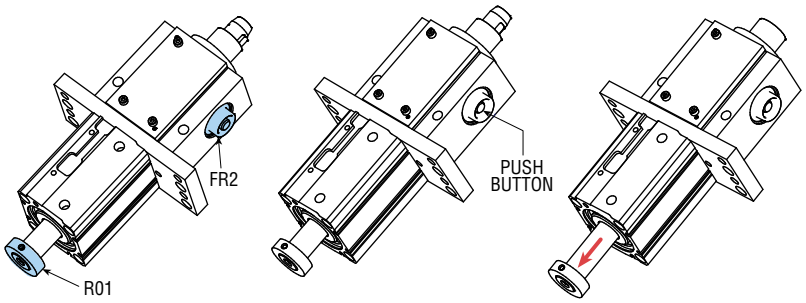

All dimensions are reference only unless specifically toleranced.

LOCK ADJUSTMENT PROCEDURE: SERIES PLKD CLAMPS

Adjustment procedures for PLKD lock with material specified:

1) Start in the unclamped position, with the pin up, and the finger(s) retracted into the pin.
2) Install the part support (item 1) with the adjustment hole over the adjustment screw (item 12). Only install two fasteners (item 11) and hand tighten. (See Figures 1 and 2.)
3) Install the shims under the finger(s) to match the panel thickness required. (See Figure 3.) Actuate the PLKD to clamp on the shims with air pressure (87 psi [6 bar]). The lock bracket assembly (item 7) will rotate counter-clockwise into position under the adjustment screw.
4) Turn the adjustment screw clockwise until it contacts the top of the lock bracket (see Figure 4).
5) After touching, back the adjustment screw off one full turn counter-clockwise to assure clearance so the lock bracket is free to rotate clockwise when the clamp opens (see Figure 5).
6) Unclamp the unit, remove the shim and two fasteners (item 11).
7) Rotate the part support (item 1) 180° so the adjustment screw is hidden as shown (Figure 6).
8) Add the four screws (item 11) back on and tighten to 44 in-lbs [5 Nm].

CAUTION: The PLKD unit requires the cover plate (item 22) with the cover plate assembly (item 20) to be **completely** mounted to the unit with the screws (3X item 14). The locking bracket assembly (item 7) will not properly sequence without these correctly assembled. Figures 3 through 5 are for reference to describe how to set the lock.

-MT20 = 2 mm material thickness
-MT30 = 3 mm material thickness
-MT40 = 4.0 mm (max)
Lock may be preset in 0.1 mm increments

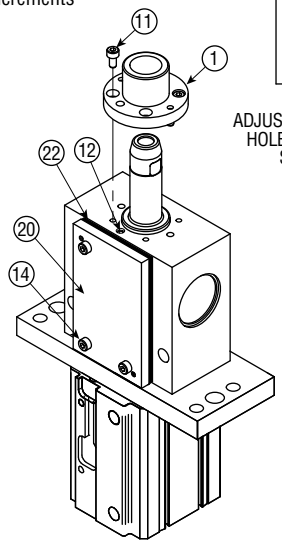

FIGURE 1

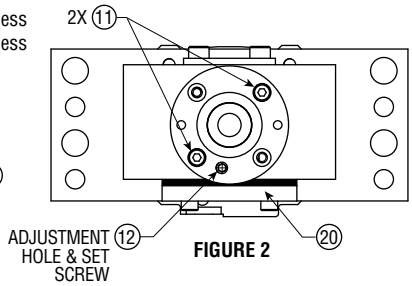

FIGURE 2

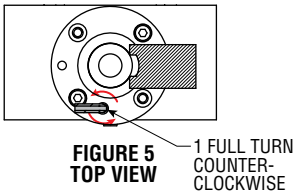

FIGURE 5
TOP VIEW

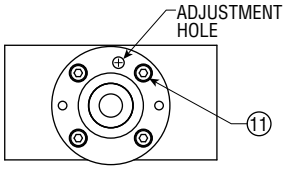

FIGURE 6
TOP VIEW

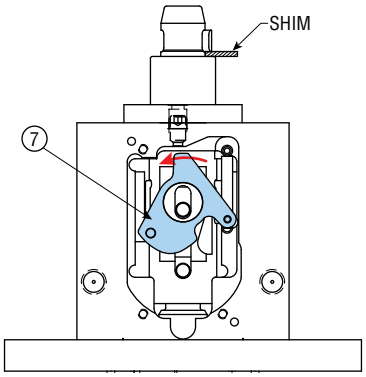

FIGURE 3

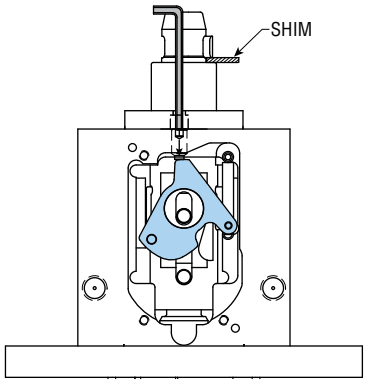

FIGURE 4

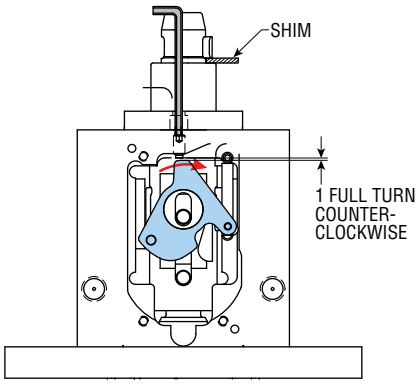

FIGURE 5

PLKD LOCK MECHANISM:

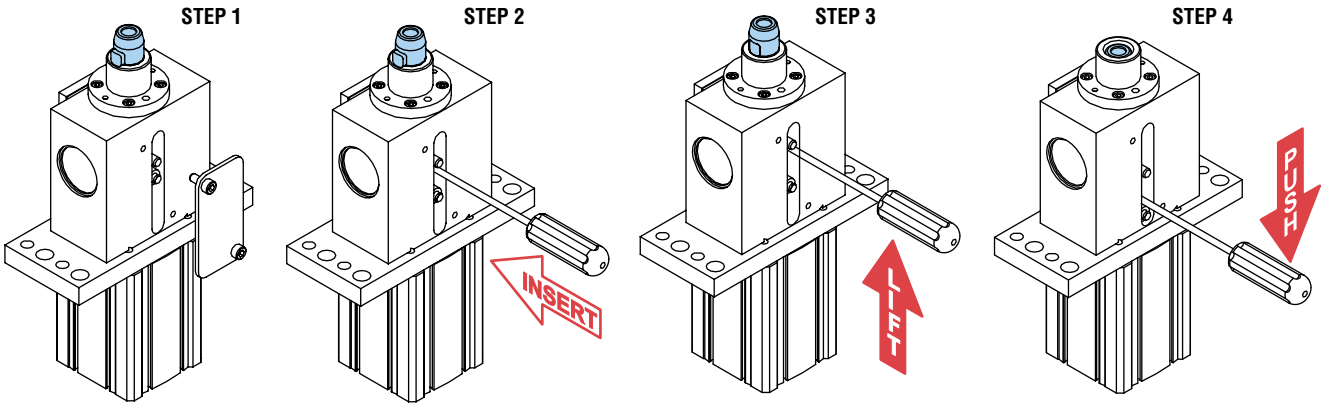

Step 1: Remove cover and screws
Step 2: Insert screwdriver between pins
Step 3: Lift upper pin with screwdriver to retract finger
Step 4: Push lower pin down to retract pin below top of part support

SERIES PLKD CLAMP ACTUATION STEPS

Series PLKD's locating pin can fully retract below the part support, allowing for easier panel removal.

A 3 position open center valve is required to control the extending and retracting of the main pin. A 2 position valve controls the extending and retracting of the finger.

PORT PRESSURIZATION SEQUENCE

STEP	PIN EXTEND PORT	PIN RETRACT PORT	FINGER EXTENDED PORT	FINGER RETRACTED PORT
1. Load Panel	High	Off	Off	High
2. Extend Finger	High	Off	High	Off
3. Retract Main Pin	Off	High	High	Off
4. Perform Operation to Panel	Off	High	High	Off
5. Drop Pressure	Off	Off	High	Off
6. Retract Finger	Off	Off	Off	High
7. Fully Retract Main Pin	Off	High	Off	High
8. Remove Panel	Off	High	Off	High
9. Extend Pin	High	Off	Off	High

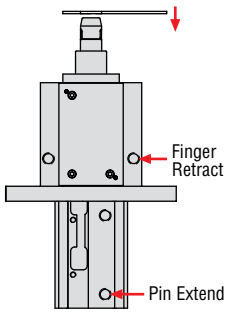

1. Load panel

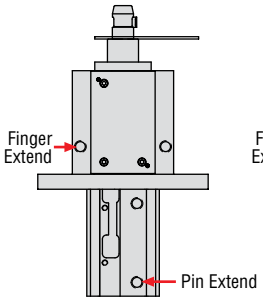

2. Extend finger

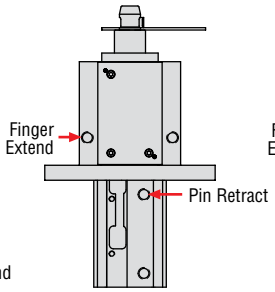

3. Retract main pin

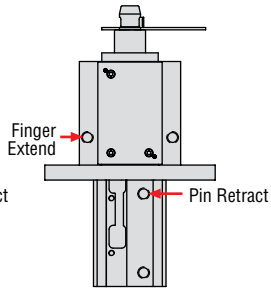

4. Perform operation to panel

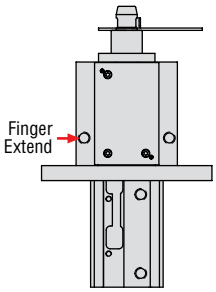

5. Drop pressure (zero pressure in cylinder)

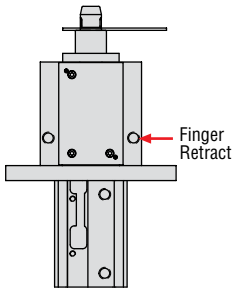

6. Retract finger (zero pressure in cylinder)

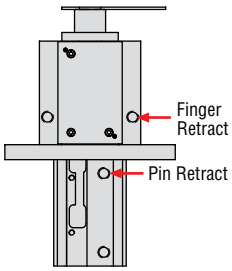

7. Fully retract main pin

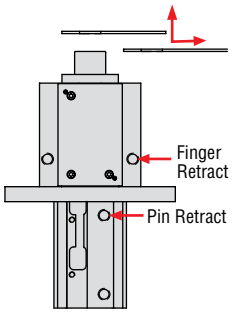

8. Remove panel

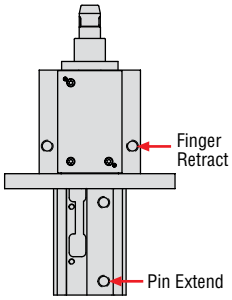

9. Extend pin

See pages 24 and 25 for position sensing and dual position sensing options.

DISPLACEMENT FOR PLKD

Pin Cylinder:

PLKD505 Clamp 3.85 in³ [63.0 cm³]
Unclamp 4.6 in³ [75.4 cm³]

PLKD510 Clamp 4.30 in³ [70.5 cm³]
Unclamp 5.2 in³ [85.3 cm³]

Finger Cylinder:

PLKDxxx Clamp 0.26 in³ [4.3 cm³]
Unclamp 0.26 in³ [4.3 cm³]

SUGGESTED SETUP FOR PLKD UNIT

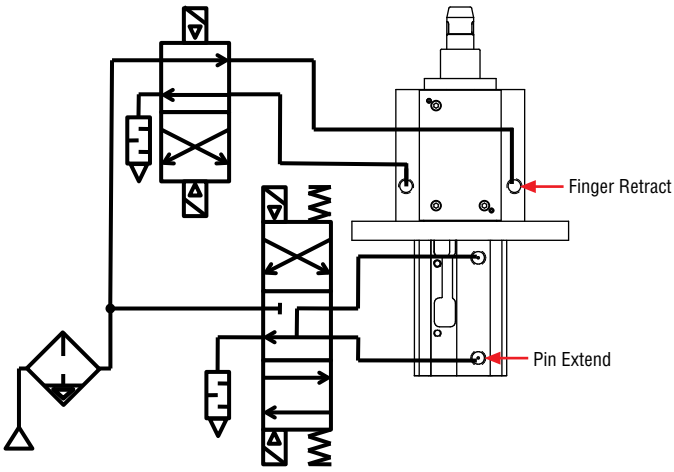

EXPLODED VIEW: SERIES PLKD CLAMPS

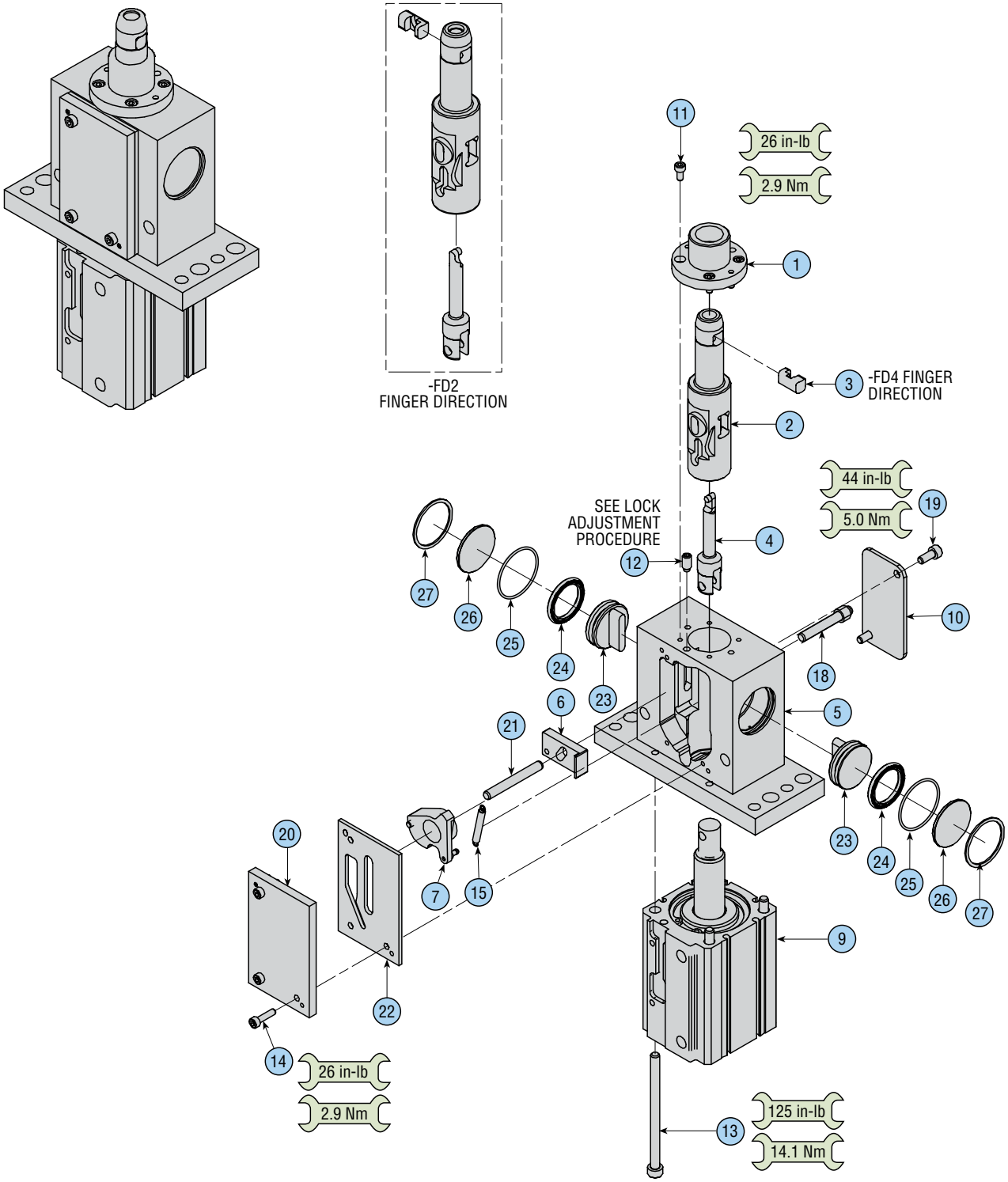

NOTES:
1) -FD4 FINGER DIRECTION SHOWN IS STANDARD
2) PP1 PORT POSITION SHOWN IS STANDARD

PARTS LIST: SERIES PLKD CLAMPS

ITEM	DESCRIPTION		CLAMP SIZE							
			1250		1550		1850		2450	
			IMPERIAL	METRIC	IMPERIAL	METRIC	IMPERIAL	METRIC	IMPERIAL	METRIC
1	Part Support Assembly		79944-02-1250		79944-02-1550		79944-02-1850		79944-02-2450	
2	Locating Pin Assembly		79943-01-1250		79943-01-1550		79943-01-1850		79943-01-2450	
3	Finger	STD, FDx	79952-01-1250		79952-01-1550		79952-01-1850		79952-01-2450	
4	Drive Rod	FD2, FD4 (STD)	79954-25		79954-16		79954-16		79954-16	
5	Body Assembly	505	81350-01	81350-02	81350-01	81350-02	81350-01	81350-02	81350-01	81350-02
		510	81350-03	81350-04	81350-03	81350-04	81350-03	81350-04	81350-03	81350-04
6	Sequence Cam		79958-02		79958-02		79958-02		79958-02	
7	Lock Bracket Assembly		79945-02		79945-02		79945-02		79945-02	
9	Cylinder Assembly without Magnet									
		505-Standard	79970-01-01-01-1	79970-02-01-01-1	79970-01-01-01-1	79970-02-01-01-1	79970-01-01-01-1	79970-02-01-01-1	79970-01-01-01-1	79970-02-01-01-1
		510-Standard	79970-01-04-01-1	79970-02-04-01-1	79970-01-04-01-1	79970-02-04-01-1	79970-01-04-01-1	79970-02-04-01-1	79970-01-04-01-1	79970-02-04-01-1
		505-R01 (Flag Rod)	79970-01-03-01-1	79970-02-03-01-1	79970-01-03-01-1	79970-02-03-01-1	79970-01-03-01-1	79970-02-03-01-1	79970-01-03-01-1	79970-02-03-01-1
		510-R01 (Flag Rod)	79970-01-06-01-1	79970-02-06-01-1	79970-01-06-01-1	79970-02-06-01-1	79970-01-06-01-1	79970-02-06-01-1	79970-01-06-01-1	79970-02-06-01-1
	Cylinder Assembly with Magnet SW00. 41, 42, 51, 52									
		505-Standard	79970-01-01-02-1	79970-02-01-02-1	79970-01-01-02-1	79970-02-01-02-1	79970-01-01-02-1	79970-02-01-02-1	79970-01-01-02-1	79970-02-01-02-1
		510-Standard	79970-01-04-02-1	79970-02-04-02-1	79970-01-04-02-1	79970-02-04-02-1	79970-01-04-02-1	79970-02-04-02-1	79970-01-04-02-1	79970-02-04-02-1
		505-R01 (Flag Rod)	79970-01-03-02-1	79970-02-03-02-1	79970-01-03-02-1	79970-02-03-02-1	79970-01-03-02-1	79970-02-03-02-1	79970-01-03-02-1	79970-02-03-02-1
		510-R01 (Flag Rod)	79970-01-06-02-1	79970-02-06-02-1	79970-01-06-02-1	79970-02-06-02-1	79970-01-06-02-1	79970-02-06-02-1	79970-01-06-02-1	79970-02-06-02-1
10	Cover Plate		79962-06							
11	Part Support Mounting Screws		59104-086							
12	Socket Set Screw		17424-136							
13	Cylinder Mounting Screws		59104-130							
14	Cover Mounting Screws		59104-020							
15	Tension Spring		81349							
18	Drive Pin Assembly		81351-01							
19	Cover Plate Mounting Screw		59104-099							
20	Cover Plate Assembly		79942-02							
21	Dowel Pin		17831-010							
22	Cover Plate		79962-05							
23	Strip Off Piston		79984-02							
24	Strip Off Piston Seal		74042-008							
25	Bore Plug Seal		3642-027-1							
26	Bore Plug		61467							
27	Retaining Ring		57618-034							

phd Unlimited®
UNIQUE SOLUTIONS

Unique PLKs and PLKDs

For more information, contact PHD's Customer Service at:
(260) 747-6151 or (800) 624-8511

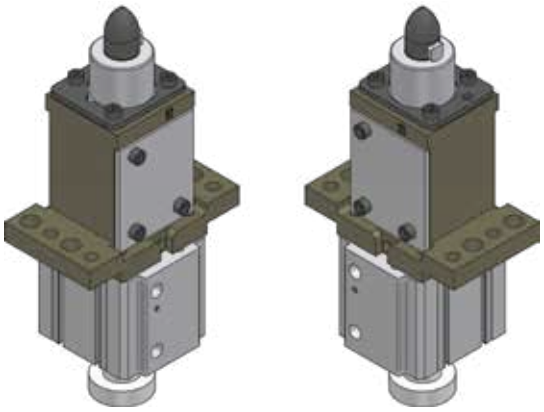

Blind finger units available in pin diameters 18.72 mm and larger. Single finger protrudes only from one side of pin. Opposite side of pin does not show finger window cut-out.

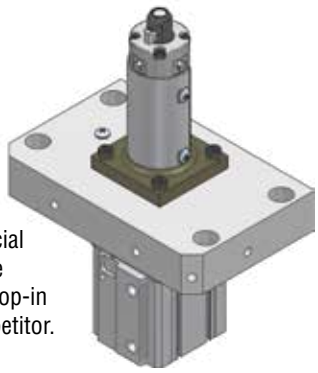

ML315021

Unit designed with special mounting and clearance requirements to be a drop-in replacement for a competitor.

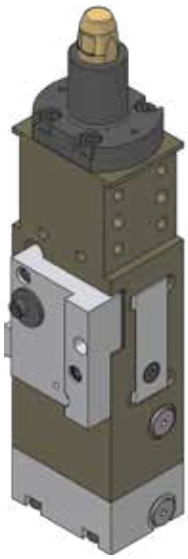

ML314668

DIN unit utilizes spring assist clamp force.

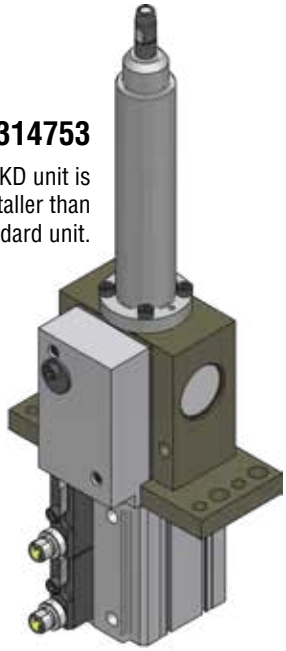

ML314753

Unique PLKD unit is 141.5 mm taller than standard unit.

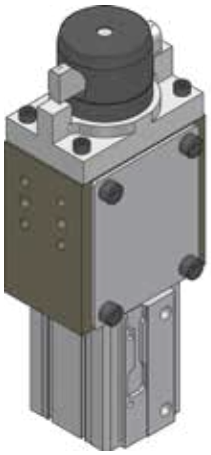

ML316504

Designed to locate a part with a hole diameter of 60 mm where dual fingers with extended finger travel was a requirement.

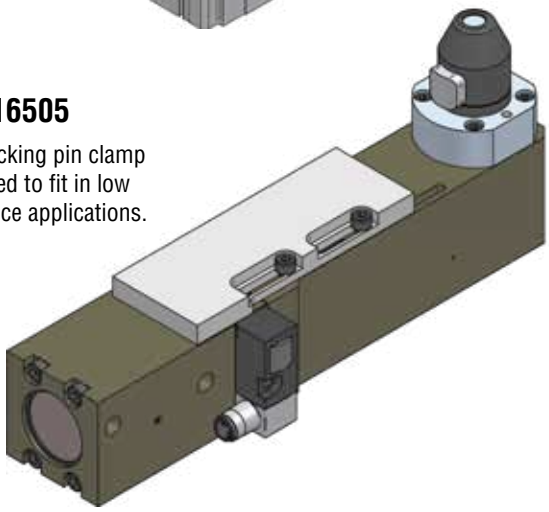

ML316505

90° Locking pin clamp designed to fit in low clearance applications.

ML314635

CNOMO unit utilizes spring assist clamp force.

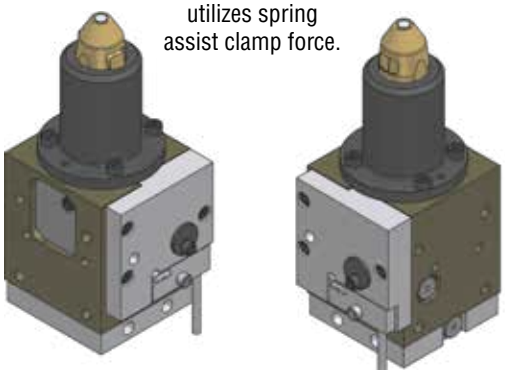

PHD, Inc.
9009 Clubridge Drive
P.O. Box 9070, Fort Wayne, Indiana 46899 U.S.A.
Phone (260) 747-6151 • Fax (260) 747-6754
www.phdinc.com • phdinfo@phdinc.com

PHDinEurope GmbH
Zum Carl-Alexander-Park 6
52499 Baesweiler, Germany
Tel. +49 (0)2401-619 77 0 • Fax. +49 (0)2401-619 77 99
www.phdinc.com • info@PHDinEurope.de

pdf 5/18 10578